Chipsmall Limited consists of a professional team with an average of over 10 year of expertise in the distribution of electronic components. Based in Hongkong, we have already established firm and mutual-benefit business relationships with customers from,Europe,America and south Asia,supplying obsolete and hard-to-find components to meet their specific needs.

With the principle of “Quality Parts,Customers Priority,Honest Operation,and Considerate Service”,our business mainly focus on the distribution of electronic components. Line cards we deal with include Microchip,ALPS,ROHM,Xilinx,Pulse,ON,Everlight and Freescale. Main products comprise IC,Modules,Potentiometer,IC Socket,Relay,Connector.Our parts cover such applications as commercial,industrial, and automotives areas.

We are looking forward to setting up business relationship with you and hope to provide you with the best service and solution. Let us make a better world for our industry!

Contact us

Tel: +86-755-8981 8866 Fax: +86-755-8427 6832
Email & Skype: info@chipsmall.com Web: www.chipsmall.com
Address: A1208, Overseas Decoration Building, #122 Zhenhua RD., Futian, Shenzhen, China

THIS DRAWING IS UNPUBLISHED. RELEASED FOR PUBLICATION 20
© COPYRIGHT20 BY - ALL RIGHTS RESERVED.

PROJECT No. A89-52294-7

REVISIONS					
P	LTR	DESCRIPTION	DATE	DWN	APVD
	A	New drawing	04JUL2014	JB,JH	MP
	A1	ECR-16-015100	25OCT2016	GH	MP

VERSION A

(UNSEALED)

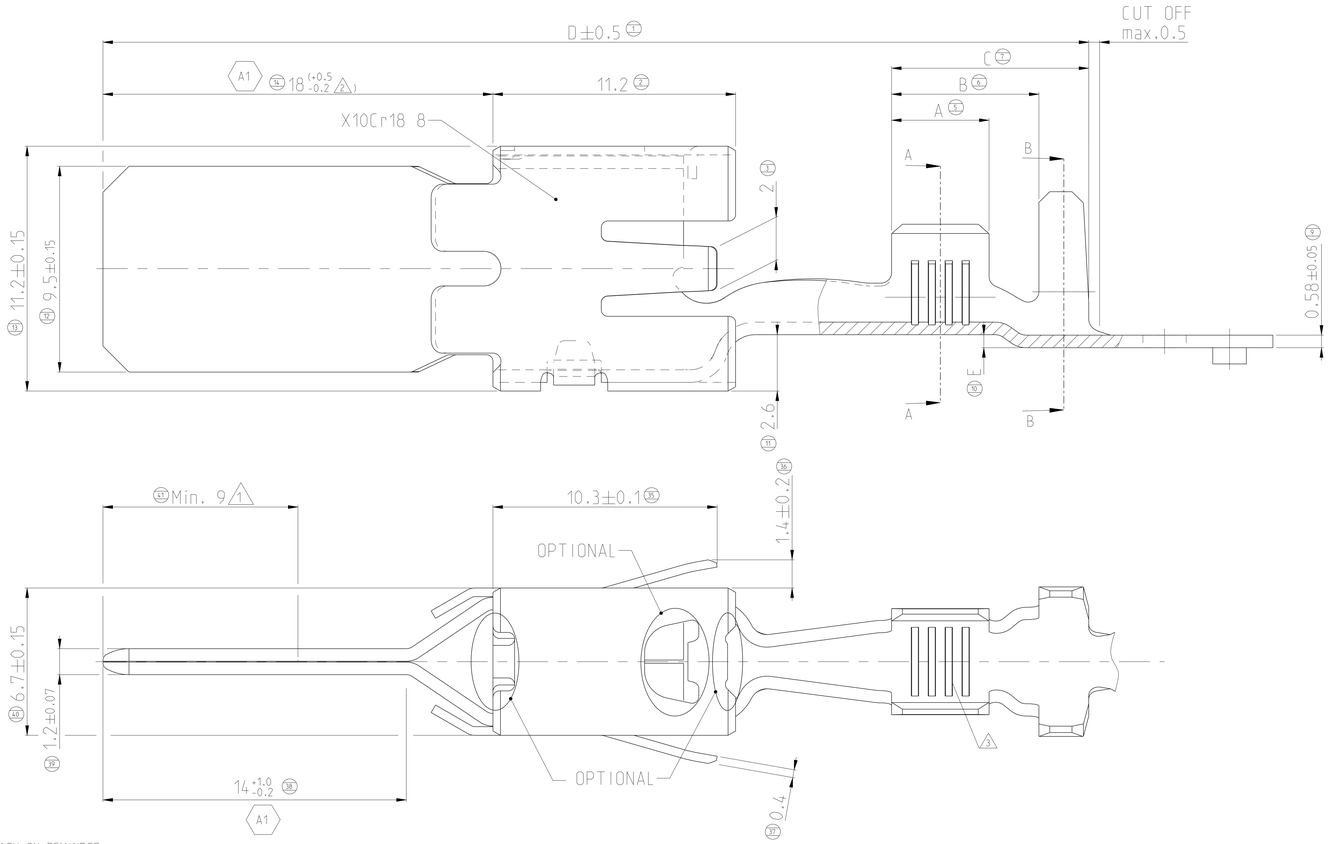

VERSION B

(SINGLE WIRE SEAL-SYSTEM)

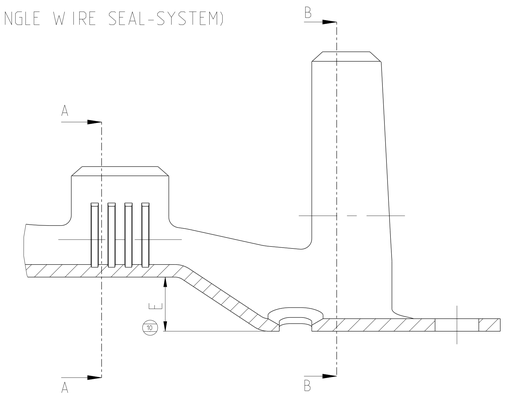

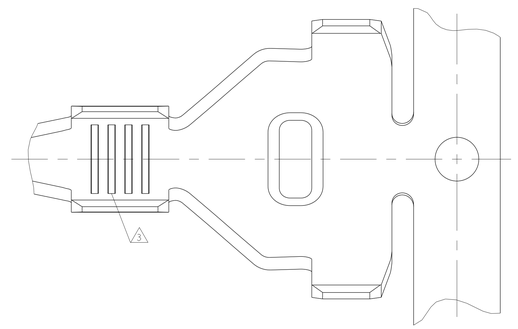

(1) MIN. 3µm Ag IN LOCALIZED FUNCTIONAL AREA. Ag FLASH ON REMINDER.

A1 (2) For 963772-x and 963774-x only

SECTION A-A
Schnitt A-A

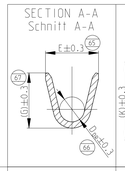

SECTION B-B
Schnitt B-B

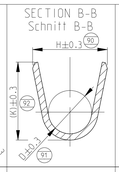

WIRE CRIMP
Drahtcrimp

	TE PN STRIP FORM Bandware	REV.	MATERIAL Werkstaff	SURFACE Oberfloeche	DGB WIRE RANGE [mm 2]	INSULATION DIAMETER [mm]	STRIP FORM Bandware: WIRE CRIMP Drahtcrimp	STRIP FORM Bandware: INSUL.-CRIMP Isol. -Crimp	WIRE CRIMP HEIGHT CH Drahtcrimp-Hoehe CH	APPLICATION TOOL Anschlag - WKZ	HAND TOOL Hndzange	EXTRACTION TOOL / Ausdrueckwerkzeug No.: 1-1579007-7	A	B	C	D	E -0.15 -0.05	Number of serrations (3) A1
VERSION B SINGLE WIRE SEAL / Einzeldichtungssystem	963774-1	C	CuSn4	PRE -TINNED	6 - 10mm 2	Ø4.6-6.6 (A1)	E = 7.0 G = 7.3 D_{DR} = 3.8	H = 12.9 K = 12.9 D = 9.5	6mm 2 = 2.98 10mm 2 = 3.60	MQC APPLICATOR 2-878735-2 (ALTERNATIVE APPLICATOR 1852862)	-		6.3	11.9	15.6	49	2.5	5
	963774-2	C	CuFe2P	PRE -TINNED														
	963772-1	C	CuSn4	PRE -TINNED	4 - 6mm 2	Ø4.0-5.2	E = 5.6 G = 5.9 D_{DR} = 2.9	H = 12.9 K = 12.9 D = 9.5	4mm 2 = 2.55 6mm 2 = 2.90	MQC APPLICATOR 2-878734-2	-		5.5	11.1	14.8	49	2.5	4
	963772-2	C	CuFe2P	PRE -TINNED														
	963772-3	C	CuSn4	SILVER PLATED (1)														
	963770-1	C	CuSn4	PRE -TINNED	2.5 - 4mm 2	Ø3.3-4.5	E = 4.9 G = 5.1 D_{DR} = 2.3	H = 12.9 K = 12.9 D = 9.5	2.5mm 2 = 2.41 4mm 2 = 2.74	MQC APPLICATOR 2-878980-2	-		4.5	11.1	14.8	49	2.5	4
	963770-2	C	CuFe2P	PRE -TINNED														
VERSION A UNSEALED / ungedichtet	963768-1	C	CuSn4	PRE -TINNED	6 - 10mm 2	Ø4.6 - 6.6 FLK	E = 7.0 G = 7.3 D_{DR} = 3.8	H = 9.2 K = 9.6 D = 5.9	6mm 2 = 2.98 6.5mm 2 = 3.06 8.5mm 2 = 3.37 10mm 2 = 3.60	MQC APPLICATOR 2-878732-2 (ALTERNATIVE APPLICATOR 1855441)	734533-1 (Only for 10 mm 2)		6.3	9	11.8	45.5	0.8	5
	963768-2	C	CuFe2P	PRE -TINNED														
	963768-3	C	CuSn0.15	PRE -TINNED														
	963766-2	C	CuFe2P	PRE -TINNED	4 - 6mm 2	Ø4 - 5.2 FLK	E = 5.6 G = 5.9 D_{DR} = 2.9	H = 7.7 K = 8.0 D = 4.6	4mm 2 = 2.55 5mm 2 = 2.72 5.5mm 2 = 2.81 6mm 2 = 2.90	MQC APPLICATOR 2-878731-2	734532-1 (Only for 6 mm 2)		5.5	7.8	10.1	45.5	0.6	4
	963766-1	C	CuSn4	PRE -TINNED														
	963764-2	D	CuFe2P	PRE -TINNED	2.5 - 4mm 2	Ø3.3 - 4.5 FLK (A1)	E = 4.9 G = 5.1 D_{DR} = 2.3	H = 6.9 K = 7.2 D = 4	2.5mm 2 = 2.41 3mm 2 = 2.52 4mm 2 = 2.74	MQC APPLICATOR 2-878979-2	734531-1		4.5	6.8	9.1	45.5	0.6	4
							CRIMP DIMENSION (mm) Crimpabmessungen (mm)			CRIMP AND EXTRACTION TOOLS								

SINGLE WIRE SEAL (SEAL SELECTION ACCORDING TO INSULATION DIAMETER)	
INSULATION DIAMETER [mm]	SEAL
4.0-4.5	VW No. 357972744
4.6-5.2	1355437-1 OR 1355307-1
5.8-6.6	1355437-2

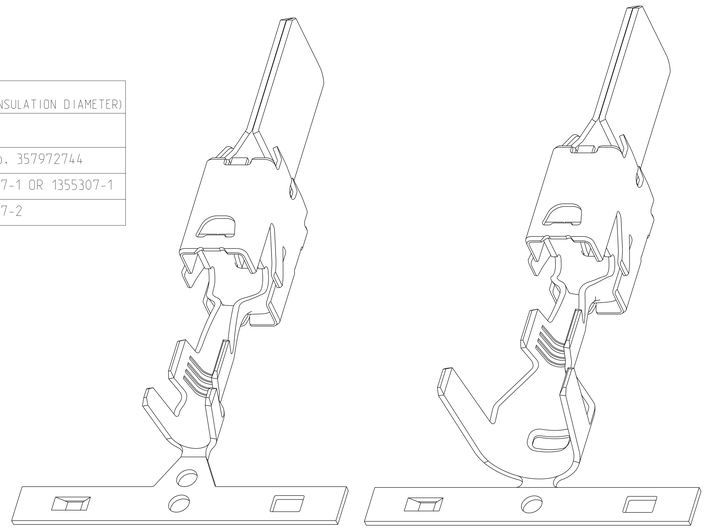

THIS DRAWING IS A CONTROLLED DOCUMENT.

DIMENSIONS: mm

TOLERANCES UNLESS OTHERWISE SPECIFIED: FLC ±0.2mm; ISO 8015; ISO 2768-m-K

ANGLES ±2°

MATERIAL - -

FINISH - -

WEIGHT -

DWN Jagadeesh.J 04JUL2014
CHK Pavlicek Martin 27AUG2014
APVD Pavlicek Martin -
PRODUCT SPEC 108-18047
APPLICATION SPEC 114-18076

TE Connectivity

NAME Product group drawing TAB 9.5x1.2mm

SIZE A0 CAGE CODE - DRAWING NO C-2287475 RESTRICTED TO -

Customer Drawing SCALE 10:1 SHEET 1 OF 1 REV A1

4806 (3/13)