Chipsmall Limited consists of a professional team with an average of over 10 year of expertise in the distribution of electronic components. Based in Hongkong, we have already established firm and mutual-benefit business relationships with customers from,Europe,America and south Asia,supplying obsolete and hard-to-find components to meet their specific needs.

With the principle of “Quality Parts,Customers Priority,Honest Operation,and Considerate Service”,our business mainly focus on the distribution of electronic components. Line cards we deal with include Microchip,ALPS,ROHM,Xilinx,Pulse,ON,Everlight and Freescale. Main products comprise IC,Modules,Potentiometer,IC Socket,Relay,Connector.Our parts cover such applications as commercial,industrial, and automotives areas.

We are looking forward to setting up business relationship with you and hope to provide you with the best service and solution. Let us make a better world for our industry!

Contact us

Tel: +86-755-8981 8866 Fax: +86-755-8427 6832
Email & Skype: info@chipsmall.com Web: www.chipsmall.com
Address: A1208, Overseas Decoration Building, #122 Zhenhua RD., Futian, Shenzhen, China

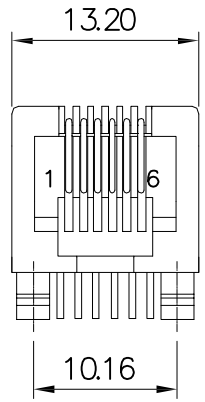

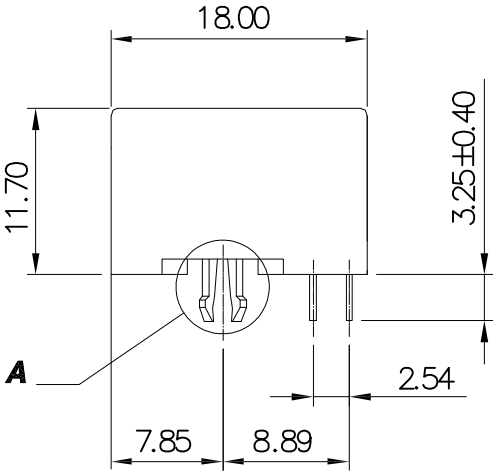

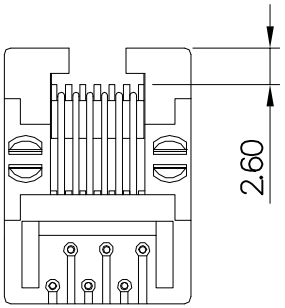

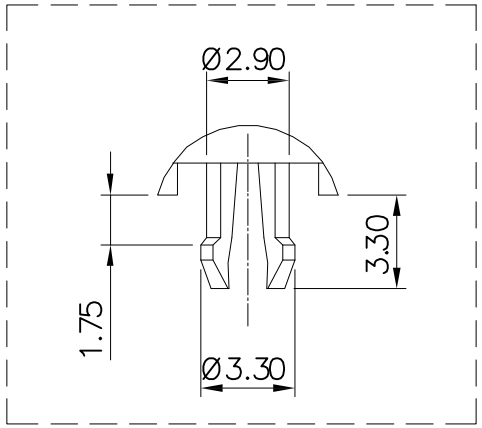

A(2:1)

Specification:

1. Electrical Char
   - Insulation Resistance: 500MΩ min. 500V DC for 1 minute
   - Contact Resistance: 20mΩ max.
   - Rating Current: 1.5A max.
   - Rating Voltage: 120V AC
   - Dielectric Voltage: 1000 Vrms at 1MA 60 sec. min.

2. Physical Char
   - Housing: PBT Glass filled (UL 94V-0) Color: Black
   - Soldering Temperature: 235°C for 5 sec.
   - Spring Wire: 0.45mm Dia Phosphor Bronze 6u" Gold plating over Nickel
   - Temperature Range: -40°C to +85°C
   - Durability: 550 mating cycles min.

3. Packing: Tray

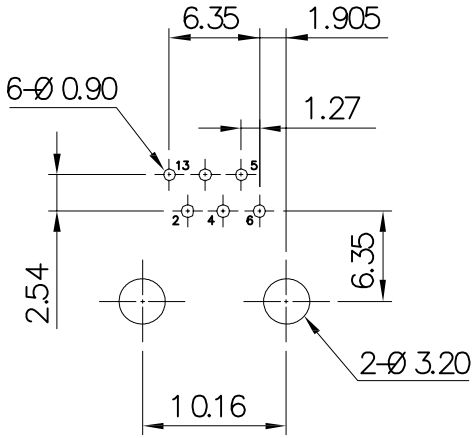

PCB LAYOUT
(Top View)

RoHS compliant
Unit:mm

Scale	Free
TOLERANCE	
.XX	±0.20
.XXX	±0.13
.XXXX	±0.05
DIM	TOL
Angle	+0°30'

Id.	Modification	Date	Name
0	Drawn	04.08.2016	Winnie

	Date	Name
Drawn	04.08.2016	Winnie
Approved	04.08.2016	Winnie

ASSMANN WSW components

Customer-No.

ASSMANN WSW-No.
A-2004-0-4-LP-N-R

Drawing-No.
ASS 7318 CO

rev00

Replace

SHEET