Chipsmall Limited consists of a professional team with an average of over 10 year of expertise in the distribution of electronic components. Based in Hongkong, we have already established firm and mutual-benefit business relationships with customers from,Europe,America and south Asia,supplying obsolete and hard-to-find components to meet their specific needs.

With the principle of “Quality Parts,Customers Priority,Honest Operation,and Considerate Service”,our business mainly focus on the distribution of electronic components. Line cards we deal with include Microchip,ALPS,ROHM,Xilinx,Pulse,ON,Everlight and Freescale. Main products comprise IC,Modules,Potentiometer,IC Socket,Relay,Connector.Our parts cover such applications as commercial,industrial, and automotives areas.

We are looking forward to setting up business relationship with you and hope to provide you with the best service and solution. Let us make a better world for our industry!

Contact us

Tel: +86-755-8981 8866 Fax: +86-755-8427 6832
Email & Skype: info@chipsmall.com Web: www.chipsmall.com
Address: A1208, Overseas Decoration Building, #122 Zhenhua RD., Futian, Shenzhen, China

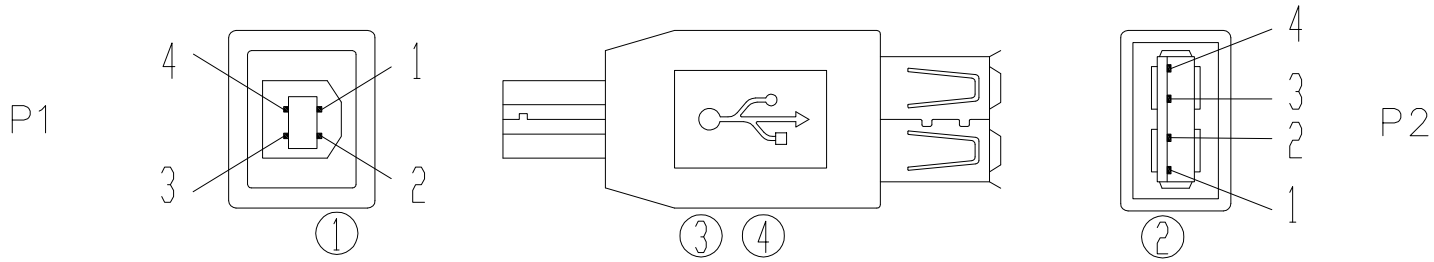

PIN ASSIGNMENT

P1	P2
1	1
2	2
3	3
4	4
SHEEL	SHEEL

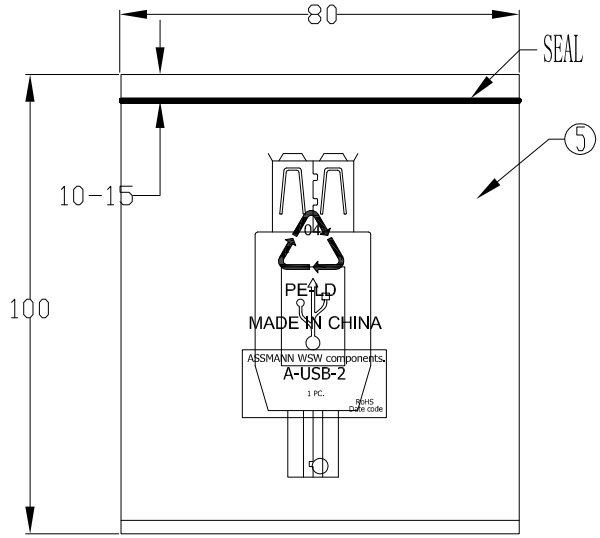

1PC/PE BAG

Electronic Test:
1.100% Test,(Open,Short,Miss Wire)
2.Contact Resistance:3 ohm max.
3.Insulation Resistance:20M ohm min.
4.Hi-Pot:300V DC/10ms

NO.	NAME	Q'TY	SPECIFICATION
⑥	PE BAG	1/10	CLEAR SIZE:170*250*0.05mm PRINT BLACK"MADE IN CHINA" +"10PCS".
⑤	PE BAG	1	CLEAR SIZE:80*100*0.05mm PRINT BLACK"MADE IN CHINA"+"1PC".
④	OUT JACKET	6g	BEIGE(IV-29) 40P PVC (WM-006)
	IN JACKET	4g	CLEAR LDPE (NM-009)
③	CABLE	5	UL1007 28AWG L=30MM
②	CONN	1	USB A FEMALE,SHELL NICKEL PIN GOLD FLASH SHORT BODY
①	CONN	1	USB B MALE,SHELL NICKEL PIN GOLD FLASH SHORT BODY

RoHS compliant
Unit: mm

Scale	Free					Date	Name	Customer-No.
TOLERANCE					Drawn	20.02.2017	Amy	
					Approved	20.02.2017	Amy	ASSMANN WSW-No. A-USB-2
DIM	TOL							Drawing-No. ASS 7876 CA rev00
		⓪	Drawn	20.02.2017	Amy			
Angle	TOL	Id.	Modification	Date	Name			Replace / Sheet

ASSMANN wsw components