Chipsmall Limited consists of a professional team with an average of over 10 year of expertise in the distribution of electronic components. Based in Hongkong, we have already established firm and mutual-benefit business relationships with customers from,Europe,America and south Asia,supplying obsolete and hard-to-find components to meet their specific needs.

With the principle of “Quality Parts,Customers Priority,Honest Operation,and Considerate Service”,our business mainly focus on the distribution of electronic components. Line cards we deal with include Microchip,ALPS,ROHM,Xilinx,Pulse,ON,Everlight and Freescale. Main products comprise IC,Modules,Potentiometer,IC Socket,Relay,Connector.Our parts cover such applications as commercial,industrial, and automotives areas.

We are looking forward to setting up business relationship with you and hope to provide you with the best service and solution. Let us make a better world for our industry!

Contact us

Tel: +86-755-8981 8866 Fax: +86-755-8427 6832
Email & Skype: info@chipsmall.com Web: www.chipsmall.com
Address: A1208, Overseas Decoration Building, #122 Zhenhua RD., Futian, Shenzhen, China

ITEM	CONNECTOR PART NO.	DESCRIPTION	IPI CHECK	EOR CHECK	Applicable Tooling
1	RSFP-LP-1V-R-250	RSF CONNECTOR WHITE HOUSING, W-W			APPLICATOR
2	SRSF-61-250A	RSF CONTACT - BRASS			
3	UL1015, 16 AWG	BLACK			

SUGGESTED MATING TAB

NO SCALE

	WITHOUT STABILIZER	WITH STABILIZER
DIM. "A"	2.20 [0.087] MIN.	4.20±0.15 [0.165±0.006]
DIM. "B"	7.40 [0.291] MIN.	7.98 [0.314] MIN.
DIM. "C"	5.90 [0.232] MAX.	(7.6)

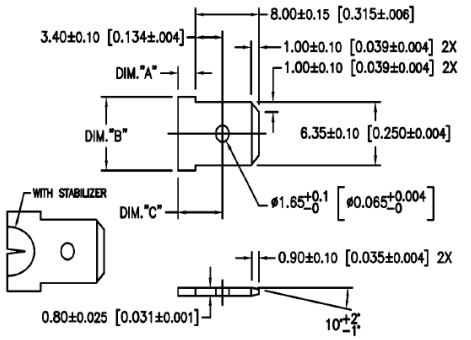

MATING TAB NOTES:
4. MAT'L: BRASS.
FINISH: SUGGESTED NO PLATING.

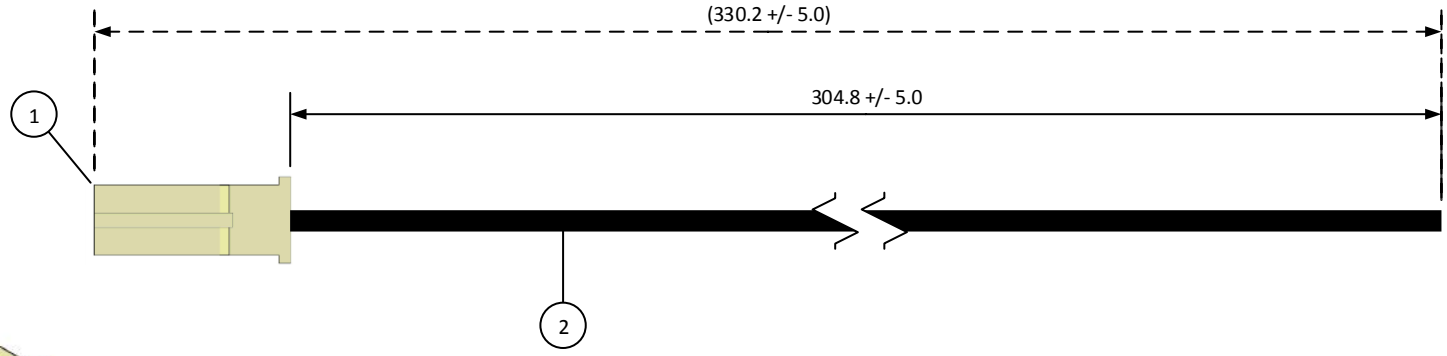

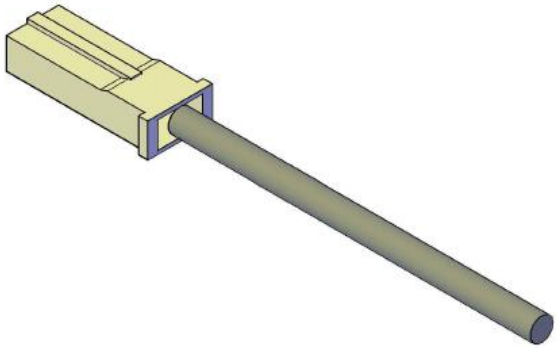

REV.	DESCRIPTION	DATE	BY

SCALE 1: 1	CUSTOMER NAME	CUSTOMER PART NO.
DIMENSIONS All dimensions are in MM with a tolerance of +/- 3.0 unless otherwise specified.	DESCRIPTION 12" INSIDE LENGTH – 1 POSITION, LIF, POS LOCK, .250, W-W INSULATED PLUG W/BLUNT LEADS, WHITE HSG MATES W/W-W RECPT 01RSFR16K305S	
DRAWN BY STEVEN PILKINGTON	ASSEMBLY PART NO. A01RSFP16K305S	
CHECKED BY JUSTIN BAKER	DRAWING NO. & REVISION GAM-111	REVISED 3/11/2016