Chipsmall Limited consists of a professional team with an average of over 10 year of expertise in the distribution of electronic components. Based in Hongkong, we have already established firm and mutual-benefit business relationships with customers from,Europe,America and south Asia,supplying obsolete and hard-to-find components to meet their specific needs.

With the principle of “Quality Parts,Customers Priority,Honest Operation,and Considerate Service”,our business mainly focus on the distribution of electronic components. Line cards we deal with include Microchip,ALPS,ROHM,Xilinx,Pulse,ON,Everlight and Freescale. Main products comprise IC,Modules,Potentiometer,IC Socket,Relay,Connector.Our parts cover such applications as commercial,industrial, and automotives areas.

We are looking forward to setting up business relationship with you and hope to provide you with the best service and solution. Let us make a better world for our industry!

Contact us

Tel: +86-755-8981 8866 Fax: +86-755-8427 6832
Email & Skype: info@chipsmall.com Web: www.chipsmall.com
Address: A1208, Overseas Decoration Building, #122 Zhenhua RD., Futian, Shenzhen, China

TECHNICAL DATA:
GAGING: .031" GO, .041" NO GO
APPLICATION: FOR SIZE 20 CONTACTS MADE TO MS3190 WIRE BARREL SPEC.
WEIGHT: 8.96 oz. (1.28 oz LIGHTER THAN PREVIOUS DESIGN)

UNCONTROLLED DOCUMENT
WILL NOT BE UPDATED

REVISIONS			A100-ENV	
REV SYM	ECO NUMBER	DESCRIPTION	BY DATE	APP'D DATE
B		REDESIGNED	DYO 10-22-13	MMK 10-22-13

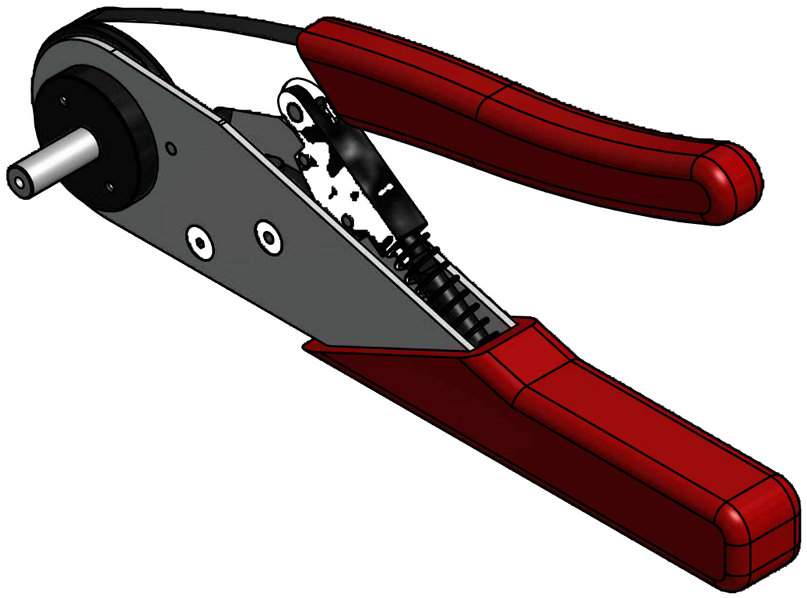

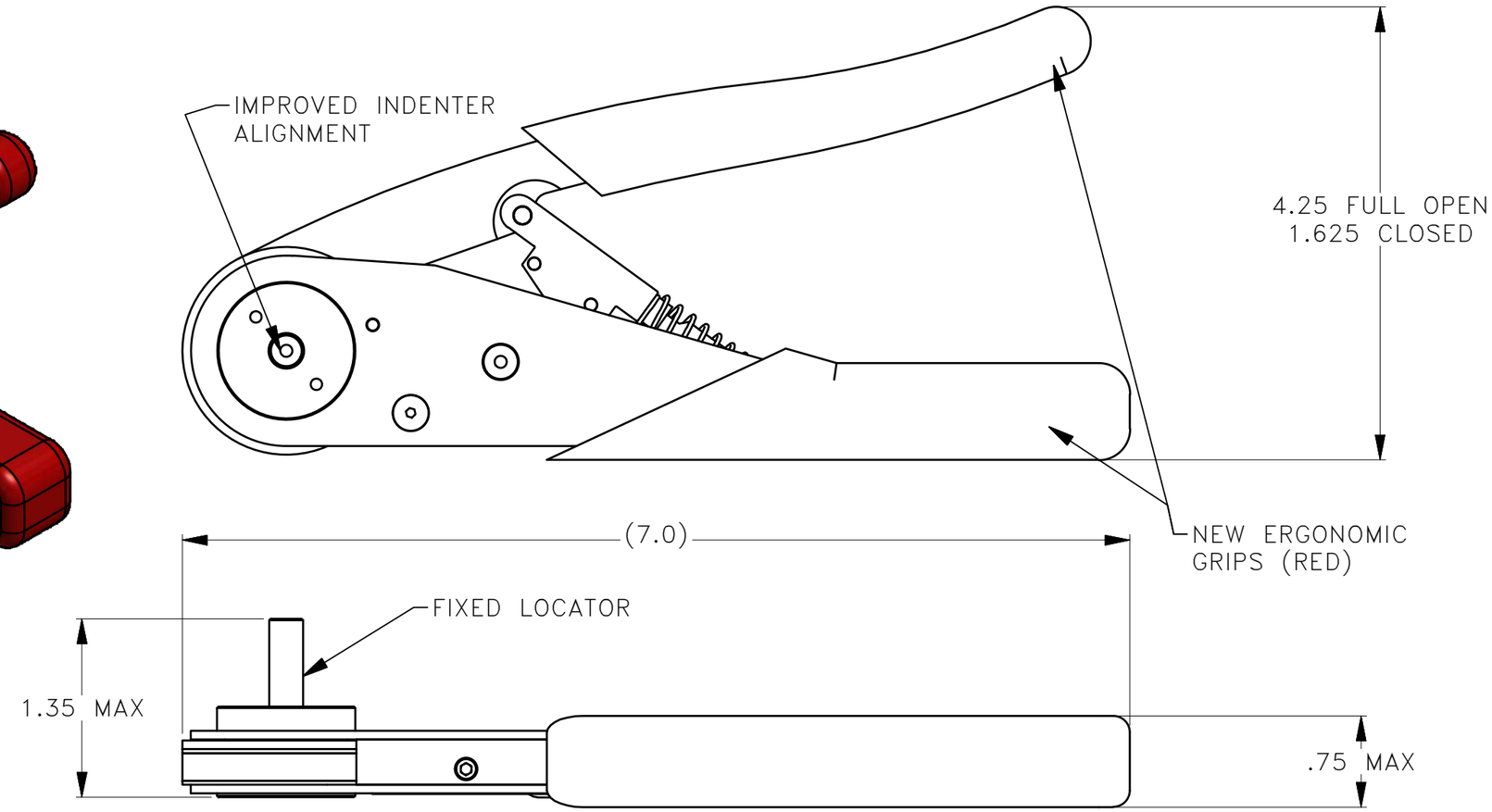

NOTES: 1. THIS IS AN ICAD DRAWING. DO NOT CHANGE MANUALLY.

THESE DRAWINGS, SPECIFICATIONS OR OTHER DATA ARE THE PROPERTY OF ASTRO TOOL CORP. AND MUST BE RETURNED UPON REQUEST. THEY CONTAIN INFORMATION OWNED AND/OR DEVELOPED BY ASTRO AT ITS OWN PRIVATE EXPENSE AND MAY NOT BE USED, DUPLICATED OR DISCLOSED TO OTHERS, IN WHOLE OR IN PART FOR DESIGN, MANUFACTURE, OR PROCUREMENT WITHOUT THE WRITTEN PERMISSION OF ASTRO TOOL CORP. EACH AND EVERY TIME.

CREATED FROM AN INVENTOR MODEL. CHANGES MUST BE REFLECTED IN THE 3D PART

DO NOT SCALE DRAWING

MATERIAL: --
HEAT TREAT: --
FINISH: --

ITEM	PART NO.	QTY.	DESCRIPTION/REMARKS

DRN. DYO DATE 10-22-13
CHK'D. MMK DATE 10-22-13
APP'D. DATE
APP'D. DATE

TOLERANCE:
UNLESS OTHERWISE SPECIFIED
FRACTIONS ± 1/32 ANGLES ± 1°
DECIMAL INCHES:
.X ±.030 .XX ±.010
.XXX ±.005 .XXXX ±.0005
REMOVE BURRS AND BREAK SHARP EDGES .005-.015

ASTRO TOOL CORP
CAGE 58164
21615 S.W. TUALATIN VALLEY HWY., BEAVERTON OR 97006

TITLE
ENVELOPE DRAWING, A100 CRIMP TOOL WITH LOCATOR
WHERE USED:

SIZE	SCALE	CAD P/N	SHEET OF
B	1:1	A100_ENV_RB	1OF1

POSTING	P/N	REV.
	A100-ENV	B