Chipsmall Limited consists of a professional team with an average of over 10 year of expertise in the distribution of electronic components. Based in Hongkong, we have already established firm and mutual-benefit business relationships with customers from,Europe,America and south Asia,supplying obsolete and hard-to-find components to meet their specific needs.

With the principle of “Quality Parts,Customers Priority,Honest Operation,and Considerate Service”,our business mainly focus on the distribution of electronic components. Line cards we deal with include Microchip,ALPS,ROHM,Xilinx,Pulse,ON,Everlight and Freescale. Main products comprise IC,Modules,Potentiometer,IC Socket,Relay,Connector.Our parts cover such applications as commercial,industrial, and automotives areas.

We are looking forward to setting up business relationship with you and hope to provide you with the best service and solution. Let us make a better world for our industry!

Contact us

Tel: +86-755-8981 8866 Fax: +86-755-8427 6832
Email & Skype: info@chipsmall.com Web: www.chipsmall.com
Address: A1208, Overseas Decoration Building, #122 Zhenhua RD., Futian, Shenzhen, China

FEMALE FACE VIEW

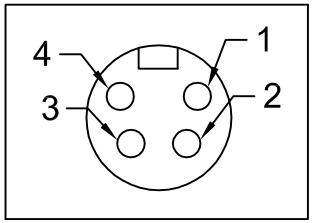

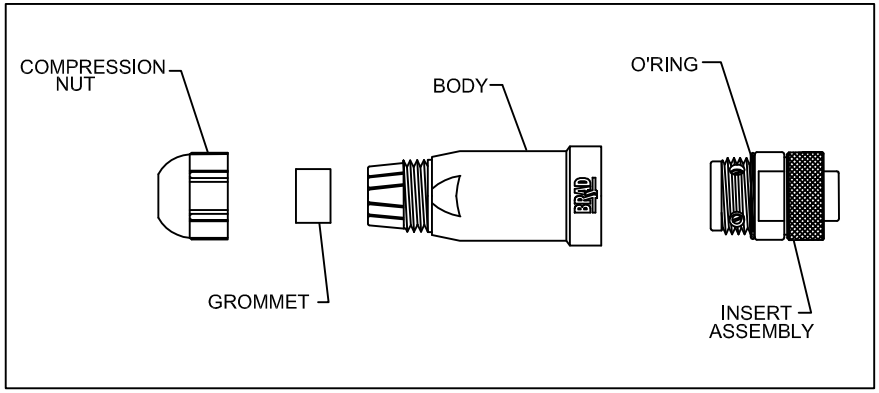

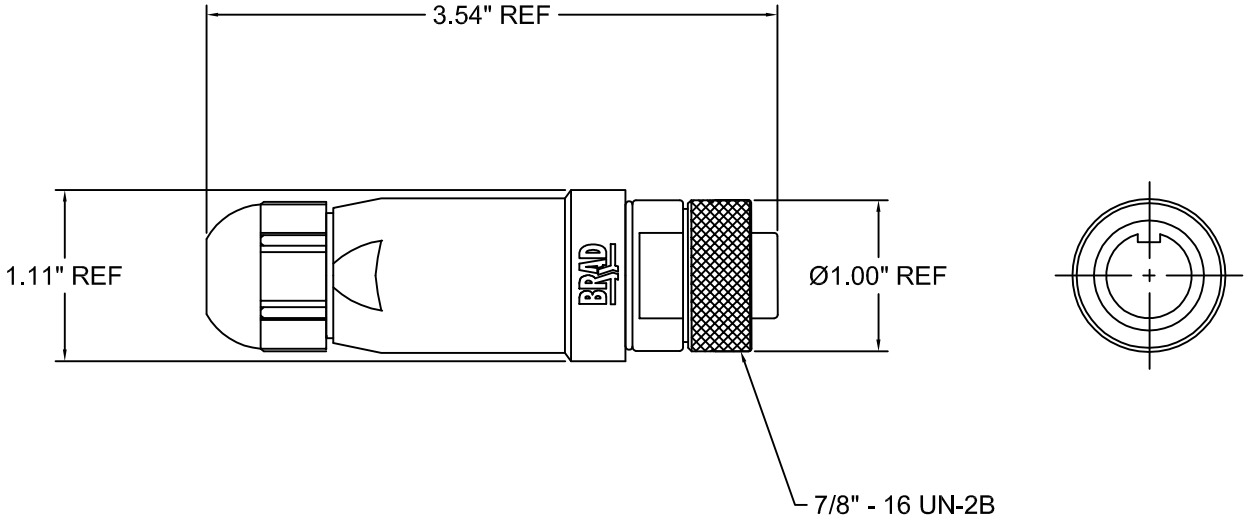

SPECS:
BODY: POLYAMIDE PA6 (BLACK)
INSERT: BLACK PUR
COUPLING NUT: NICKEL-PLATED BRASS
CABLE O.D RANGE: 0.20" - 0.48"
TERMINATION: SCREW
ACCEPTABLE WIRE GAUGE: 14AWG - 24AWG
ELECTRICAL: 600V AC/DC, 8A
TEMPERATURE: -40°C to 80°C

MATERIAL NUMBER	ENGINEERING NUMBER
1300170015	1A4000-34

REFERENCE USE ONLY

GENERAL TOLERANCES (UNLESS SPECIFIED)	mm	INCH
4 PLACES		
3 PLACES		
2 PLACES		
1 PLACE		

DRAFT WHERE APPLICABLE MUST REMAIN WITHIN DIMENSIONS

DESCRIPTION / REV

DIMENSION STYLE

SCALE

DESIGN UNITS

THIRD ANGLE PROJECTION

DRAWN BY RB DATE

CHECKED BY --- DATE ---

APPROVED BY --- DATE ---

MATERIAL NO. 1300170015

SIZE C

TITLE: BRAD CONNECTIVITY MINI-CHANGE FIELD-ATTACHABLE 4POLE FEMALE STRAIGHT

molex MOLEX INCORPORATED

DOCUMENT: AEP DIVISION

SHEET NO. 1 OF 1

THIS DRAWING CONTAINS INFORMATION THAT IS PROPRIETARY TO MOLEX INCORPORATED AND SHOULD NOT BE USED WITHOUT WRITTEN PERMISSION