Chipsmall Limited consists of a professional team with an average of over 10 year of expertise in the distribution of electronic components. Based in Hongkong, we have already established firm and mutual-benefit business relationships with customers from,Europe,America and south Asia,supplying obsolete and hard-to-find components to meet their specific needs.

With the principle of “Quality Parts,Customers Priority,Honest Operation,and Considerate Service”,our business mainly focus on the distribution of electronic components. Line cards we deal with include Microchip,ALPS,ROHM,Xilinx,Pulse,ON,Everlight and Freescale. Main products comprise IC,Modules,Potentiometer,IC Socket,Relay,Connector.Our parts cover such applications as commercial,industrial, and automotives areas.

We are looking forward to setting up business relationship with you and hope to provide you with the best service and solution. Let us make a better world for our industry!

Contact us

Tel: +86-755-8981 8866 Fax: +86-755-8427 6832
Email & Skype: info@chipsmall.com Web: www.chipsmall.com
Address: A1208, Overseas Decoration Building, #122 Zhenhua RD., Futian, Shenzhen, China

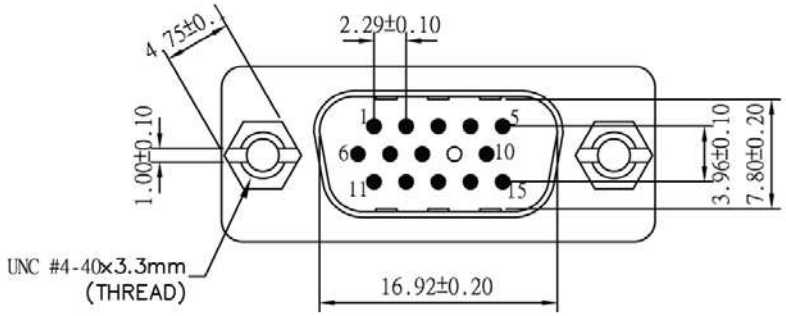

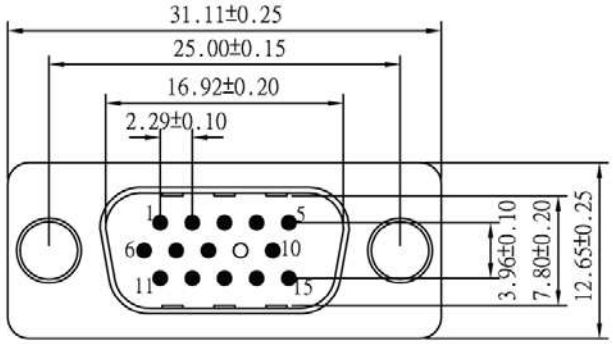

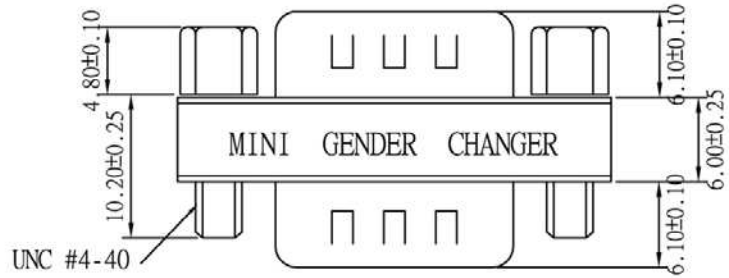

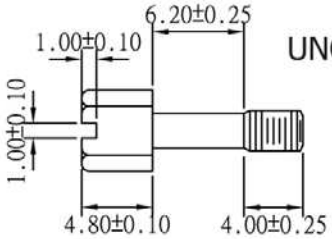

UNC #4-40 Hexscrew

Material:

- Insulator: PBT Glass fibre reinforced UL 94 V0
- Contact: Brass
- Contact plating: Gold plated over nickel
- Shell: Tin plated shell
- Yellow label with black characters

Unit: MM

RoHS Complaint

Scale	1:1						Name	Item No. AB418
TOLERANCE					Drawn	11.22.11	Chappell	
X.X	±0.40				Approved			Title: Mini Gender Changer - HD D-Sub 15 Pin Male <=> HD D-Sub 15 Pin Male
X.XX	±0.25							
X.XXX	±0.15							Drawing No. rev00
Angle	±3°							
			Modification	Date	Name	ASSMANN WSW components		Replace / Sheet