Chipsmall Limited consists of a professional team with an average of over 10 year of expertise in the distribution of electronic components. Based in Hongkong, we have already established firm and mutual-benefit business relationships with customers from,Europe,America and south Asia,supplying obsolete and hard-to-find components to meet their specific needs.

With the principle of “Quality Parts,Customers Priority,Honest Operation,and Considerate Service”,our business mainly focus on the distribution of electronic components. Line cards we deal with include Microchip,ALPS,ROHM,Xilinx,Pulse,ON,Everlight and Freescale. Main products comprise IC,Modules,Potentiometer,IC Socket,Relay,Connector.Our parts cover such applications as commercial,industrial, and automotives areas.

We are looking forward to setting up business relationship with you and hope to provide you with the best service and solution. Let us make a better world for our industry!

Contact us

Tel: +86-755-8981 8866 Fax: +86-755-8427 6832
Email & Skype: info@chipsmall.com Web: www.chipsmall.com
Address: A1208, Overseas Decoration Building, #122 Zhenhua RD., Futian, Shenzhen, China

P1 (HDMI)

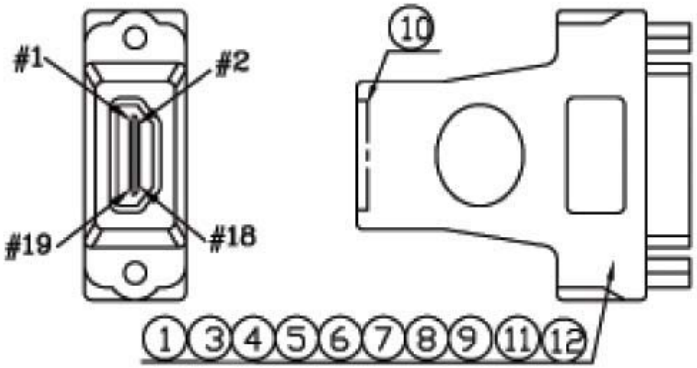

P2 (DVI)

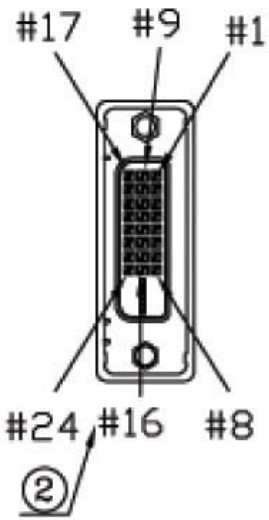

PIN ASSIGNMENT

P1	P2
1	2
3	1
2	3
4	10
6	9
5	11
7	18
9	17
8	19
10	23
12	24
11	22
15	6
16	7
17	15
19	16
18	14
$	$

NO	TYPE	DESCRIPTION	QTY	UNIT
*	xxxxxx	LABEL:50*25MM	403/400	PCS
*	330010004079		42/400	PCS
*	390	PE BAG:30"*28"*0.08MM	1/400	PCS
*	390	CARTON:46*30*20CM	1/400	PCS
*	390	PE BAG:6"*8"*0.06MM	1/10	PCS
*	370	PE BAG:3.5"*3.5"*0.06MM	1	PCS
12	210	JUMP-WIRE-26#-1007	[illegible]	PCS
11	110640000120	HDMI A type Conn(Female) <[illegible]>	1	PCS
10	370	PVC-BK10/30 (MOLDING 1 PCS HDMI HOOD)	2	G
9	370	PVC-BLACK10/50	12	G
8	370	SOL-WIRE-FULL-TIN-1.2	2.0	G
7	370	FOIL-CU:24MM	80*1	MM
6	370	HI TEAMP TAPE:W:19MM	70*1	MM
5	370	PE-5321	3.5	G
4	220	SOL-WIRE-FULL-TIN1.0	1.0	G
3	210	JUMP-WIRE-26#-1007	[illegible]	MM
2	110362325003	DVI-24+KEY-F(WHD/NUTS	1	PCS
1	260030000115	PCB:Y-S0002	1	PCS

RoHS Complaint

Scale	1:1						Name
TOLERANCE					Drawn	12.07.11	Chappell
X.X	±0.40				Approved		
X.XX	±0.25						
X.XXX	±0.15						
Angle	±3°						
			Modification	Date	Name		

ASSMANN WSW components

Item No. AB566-R

Title HDMI A - DVI-D, Adapter F-M/F

Drawing No.

rev00

Replace

Sheet