Chipsmall Limited consists of a professional team with an average of over 10 year of expertise in the distribution of electronic components. Based in Hongkong, we have already established firm and mutual-benefit business relationships with customers from,Europe,America and south Asia,supplying obsolete and hard-to-find components to meet their specific needs.

With the principle of “Quality Parts,Customers Priority,Honest Operation,and Considerate Service”,our business mainly focus on the distribution of electronic components. Line cards we deal with include Microchip,ALPS,ROHM,Xilinx,Pulse,ON,Everlight and Freescale. Main products comprise IC,Modules,Potentiometer,IC Socket,Relay,Connector.Our parts cover such applications as commercial,industrial, and automotives areas.

We are looking forward to setting up business relationship with you and hope to provide you with the best service and solution. Let us make a better world for our industry!

Contact us

Tel: +86-755-8981 8866 Fax: +86-755-8427 6832
Email & Skype: info@chipsmall.com Web: www.chipsmall.com
Address: A1208, Overseas Decoration Building, #122 Zhenhua RD., Futian, Shenzhen, China

5 V Low Power, Slew-Rate Limited RS-485/RS-422 Transceiver

ADM483

FEATURES

EIA RS-485/RS-422-compliant
Data rates up to 250 kbps
Slew-rate limited for low EMI
100 nA supply current in shutdown mode
Low power consumption (120 µA)
Up to 32 transceivers on one bus
Outputs high-z when disabled or powered off
–7 V to +12 V bus common-mode range
Thermal shutdown and short-circuit protection
Pin-compatible with MAX483
Specified over –40°C to +85°C temperature range
Available in 8-lead SOIC package

APPLICATIONS

Low power RS-485 applications
EMI sensitive systems
DTE-DCE interfaces
Industrial control
Packet switching
Local area networks
Level translators

FUNCTIONAL BLOCK DIAGRAM

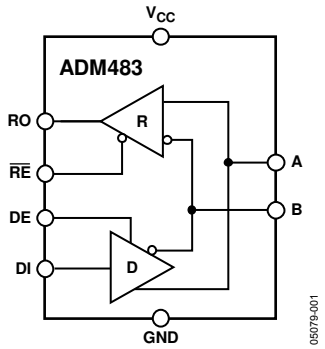

Figure 1.

GENERAL DESCRIPTION

The ADM483 is a low power differential line transceiver suitable for half-duplex data communication on multipoint bus transmission lines. It is designed for balanced data transmission, and complies with EIA Standards RS-485 and RS-422.The part contains a differential line driver and a differential line receiver. Both share the same differential pins, with either the driver or the receiver being enabled at any given time.

The device has an input impedance of 12 kΩ, allowing up to 32 transceivers on one bus. Since only one driver should be enabled at any time, the output of a disabled or powered-down driver is three-stated to avoid overloading the bus. This high impedance driver output is maintained over the entire common-mode voltage range from –7 V to +12 V.

The receiver contains a fail-safe feature that results in a logic high output state if the inputs are unconnected (floating).

The driver outputs are slew-rate limited to reduce EMI and data errors caused by reflections from improperly terminated buses. Excessive power dissipation caused by bus contention or by output shorting is prevented by a thermal shutdown circuit.

The part is fully specified over the industrial temperature range, and is available in an 8-lead SOIC package.

Rev. 0
Information furnished by Analog Devices is believed to be accurate and reliable. However, no responsibility is assumed by Analog Devices for its use, nor for any infringements of patents or other rights of third parties that may result from its use. Specifications subject to change without notice. No license is granted by implication or otherwise under any patent or patent rights of Analog Devices. Trademarks and registered trademarks are the property of their respective owners.

One Technology Way, P.O. Box 9106, Norwood, MA 02062-9106, U.S.A.
Tel: 781.329.4700 **www.analog.com**
Fax: 781.326.8703
© 2004 Analog Devices, Inc. All rights reserved.

TABLE OF CONTENTS

Specifications ... 3
Timing Specifications ... 4
Absolute Maximum Ratings ... 5
ESD Caution ... 5
Pin Configuration and Function Descriptions ... 6
Test Circuits ... 7
Switching Characteristics ... 8
Typical Performance Characteristics ... 9
Applications ... 11
Differential Data Transmission ... 11
Cable and Data Rate ... 11
Thermal Shutdown ... 12
Receiver Open-Circuit Fail-Safe ... 12
Outline Dimensions ... 13
Ordering Guide ... 13

REVISION HISTORY

10/04—Revision 0: Initial Version

SPECIFICATIONS

V_{CC} = 5 V ± 5%, T_A = T_{MIN} to T_{MAX}, unless otherwise noted.

Table 1.

Parameter	Min	Typ	Max	Unit	Test Conditions/Comments
DRIVER					
Differential Output Voltage, V_{OD}			5	V	R = ∞, Figure 3
	2.0			V	R = 50 Ω (RS-422), Figure 3
	1.5		5	V	R = 27 Ω (RS-485), Figure 3
	1.5		5	V	V_{TST} = −7 V to 12 V, Figure 4
Δ $\|V_{OD}\|$ for Complementary Output States			0.2	V	R = 27 Ω or 50 Ω, Figure 3
Common-Mode Output Voltage, V_{OC}			3	V	R = 27 Ω or 50 Ω, Figure 3
Δ $\|V_{OC}\|$ for Complementary Output States			0.2	V	R = 27 Ω or 50 Ω, Figure 3
Output Short-Circuit Current, V_{OUT} = High	35		250	mA	−7 V < V_{OUT} < +12 V
Output Short-Circuit Current, V_{OUT} = Low	35		250	mA	−7 V < V_{OUT} < +12 V
DRIVER INPUT LOGIC					
CMOS Input Logic Threshold Low			0.8	V	
CMOS Input Logic Threshold High	2.0			V	
CMOS Logic Input Current (DI)			±2	µA	
DE Input Resistance to GND		220		kΩ	
RECEIVER					
Differential Input Threshold Voltage, V_{TH}	−200		+200	mV	−7 V < V_{CM} < +12 V
Input Hysteresis		70		mV	V_{CM} = 0V
Input Resistance (A, B)	12			kΩ	−7 V < V_{CM} < +12 V
Input Current (A, B)			1	mA	V_{IN} = +12 V
			−0.8	mA	V_{IN} = −7 V
CMOS Logic Input Current ($\overline{RE}$)			±2	µA	
CMOS Output Voltage Low			0.4	V	I_{OUT} = 4 mA
CMOS Output Voltage High	3.5			V	I_{OUT} = −4 mA
Output Short-Circuit Current	7		95	mA	0 V < V_{OUT} < V_{CC}
Three-State Output Leakage Current			±2	µA	0.4 ≤ V_{OUT} ≤ 2.4 V
POWER SUPPLY CURRENT		0.1	10	µA	DE = 0 V, $\overline{RE}$ = V_{CC} (shutdown)
		120	250	µA	DE = 0 V, $\overline{RE}$ = 0 V
		350	650	µA	DE = V_{CC}

TIMING SPECIFICATIONS

V_{CC} = 5 V ± 5%, T_A = T_{MIN} to T_{MAX}, unless otherwise noted.

Table 2.

Parameter	Min	Typ	Max	Unit	Test Conditions/Comments
DRIVER					
Maximum Data Rate	250			kbps	
Propagation Delay t_{PLH}, t_{PHL}	250	800	2000	ns	R_{LDIFF} = 54 Ω, C_{L1} = C_{L2} = 100 pF, Figure 5
Skew t_{SKEW}		100	800	ns	R_{LDIFF} = 54 Ω, C_{L1} = C_{L2} = 100 pF, Figure 5
Rise/Fall Time t_R, t_F	200		2000	ns	R_{LDIFF} = 54 Ω, C_{L1} = C_{L2} = 100 pF, Figure 5
Enable Time	125		2000	ns	R_L = 500 Ω, C_L = 100 pF, Figure 6
Disable Time	125		3000	ns	R_L = 500 Ω, C_L = 15 pF, Figure 6
Enable Time from Shutdown			5000	ns	R_L = 500 Ω, C_L = 100 pF, Figure 6
RECEIVER					
Propagation Delay t_{PLH}, t_{PHL}	250		2000	ns	C_L = 15 pF, Figure 7
Differential Skew t_{SKEW}		100		ns	C_L = 15 pF, Figure 7
Enable Time		20	50	ns	R_L = 1 kΩ, C_L = 15 pF, Figure 8
Disable Time		20	50	ns	R_L = 1 kΩ, C_L = 15 pF, Figure 8
Enable Time from Shutdown			5000	ns	R_L = 1 kΩ, C_L = 15 pF, Figure 8
Time to Shutdown[1]	50	330	3000	ns	

[1] The device is put into shutdown mode by driving $\overline{RE}$ high and DE low. If these inputs are in this state for less than 50 ns, the device is guaranteed not to enter shutdown mode. If the enable inputs are in this state for at least 3000 ns, the device is guaranteed to have entered shutdown mode.

ABSOLUTE MAXIMUM RATINGS

T_A = 25°C, unless otherwise noted.

Table 3.

Parameter	Rating
V_{CC} to GND	6 V
Digital I/O Voltage (DE, $\overline{RE}$, DI, ROUT)	−0.3 V to V_{CC} + 0.3 V
Driver Output/Receiver Input Voltage	−9 V to +14 V
Operating Temperature Range	−40°C to +85°C
Storage Temperature Range	−65°C to +125°C
θ_{JA} Thermal Impedance (SOIC)	110°C/W
Lead Temperature	
Soldering (10 s)	300°C
Vapor Phase (60 s)	215°C
Infrared (15 s)	220°C

Stresses above those listed under Absolute Maximum Ratings may cause permanent damage to the device. This is a stress rating only; functional operation of the device at these or any other conditions above those indicated in the operational section of this specification is not implied. Exposure to absolute maximum rating conditions for extended periods may affect device reliability.

ESD CAUTION

ESD (electrostatic discharge) sensitive device. Electrostatic charges as high as 4000 V readily accumulate on the human body and test equipment and can discharge without detection. Although this product features proprietary ESD protection circuitry, permanent damage may occur on devices subjected to high energy electrostatic discharges. Therefore, proper ESD precautions are recommended to avoid performance degradation or loss of functionality.

PIN CONFIGURATION AND FUNCTION DESCRIPTIONS

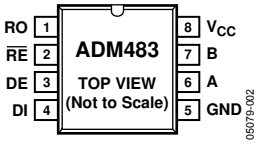

Figure 2. Pin Configuration

Table 4. Pin Function Descriptions

Pin No.	Mnemonic	Description
1	RO	Receiver Output. When enabled, if A > B by 200 mV, then RO = high. If A < B by 200 mV, then RO = low.
2	$\overline{RE}$	Receiver Output Enable. A low level enables the receiver output, RO. A high level places it in a high impedance state.
3	DE	Driver Output Enable. A high level enables the driver differential inputs A and B. A low level places it in a high impedance state.
4	DI	Driver Input. When the driver is enabled, a logic low on DI forces A low and B high, while a logic high on DI forces A high and B low.
5	GND	Ground.
6	A	Noninverting Receiver Input A/Driver Output A.
7	B	Inverting Receiver Input B/Driver Output B.
8	V_{CC}	5 V Power Supply.

TEST CIRCUITS

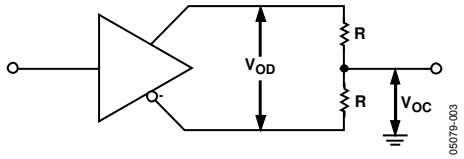

Figure 3. Driver Voltage Measurement

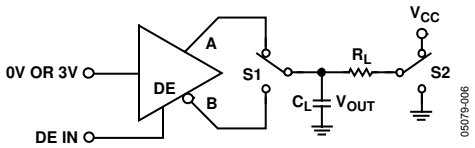

Figure 6. Driver Enable/Disable

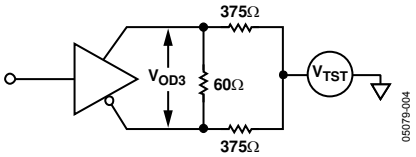

Figure 4. Driver Voltage Measurement over Common-Mode Voltage Range

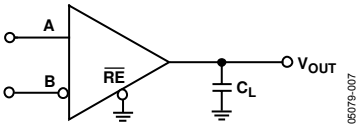

Figure 7. Receiver Propagation Delay

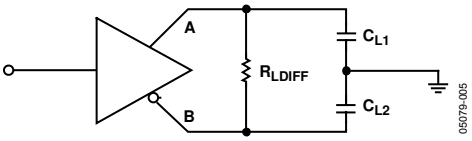

Figure 5. Driver Propagation Delay

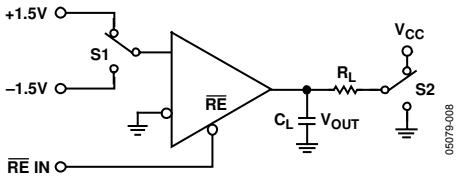

Figure 8. Receiver Enable/Disable

SWITCHING CHARACTERISTICS

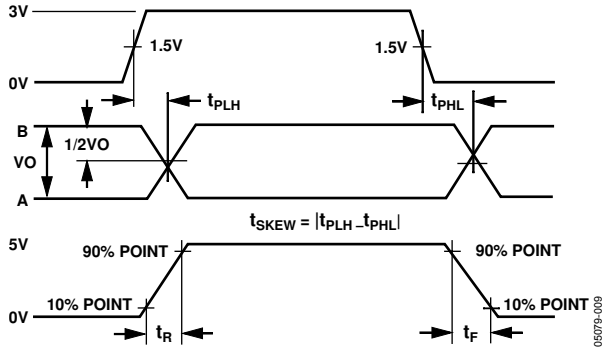

Figure 9. Driver Propagation Delay, Rise/Fall Timing

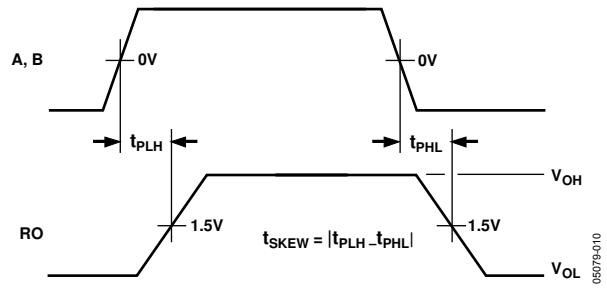

Figure 10. Receiver Propagation Delay

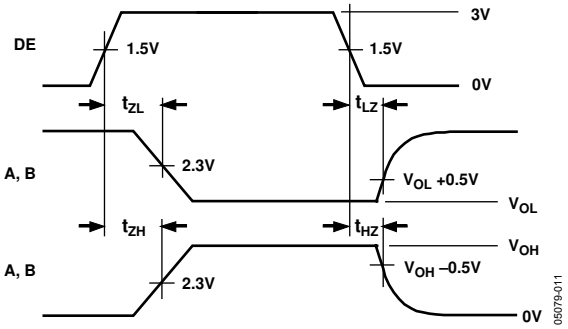

Figure 11. Driver Enable/Disable Timing

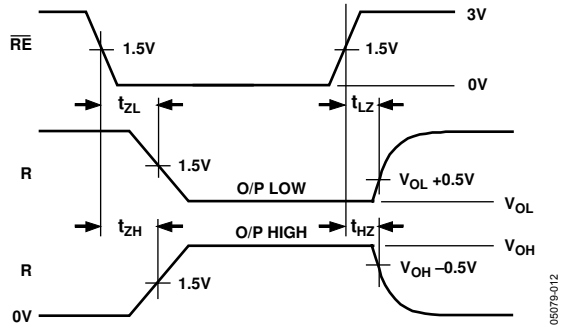

Figure 12. Receiver Enable/Disable Timing

TYPICAL PERFORMANCE CHARACTERISTICS

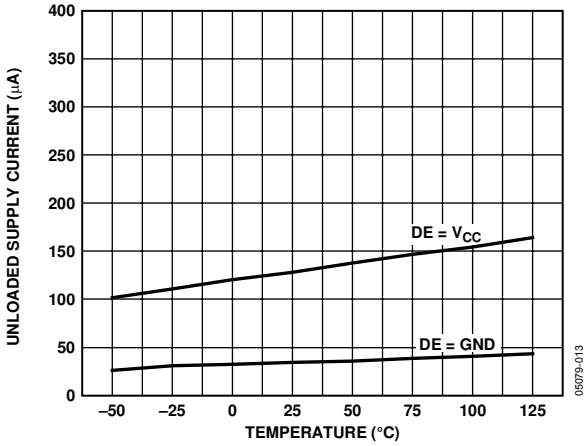

Figure 13. Supply Current vs. Temperature

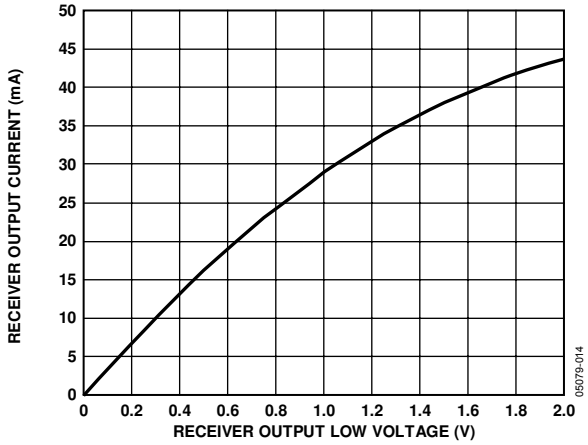

Figure 14. Output Current vs. Receiver Output Low Voltage

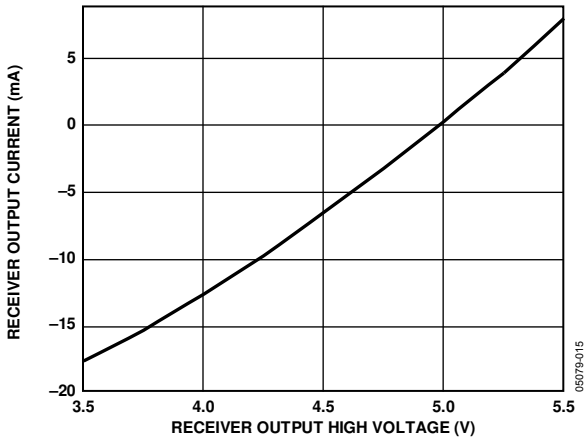

Figure 15. Output Current vs. Receiver Output High Voltage

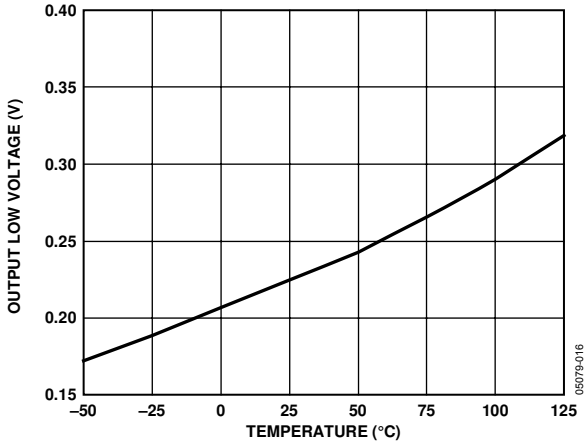

Figure 16. Receiver Output Low Voltage vs. Temperature

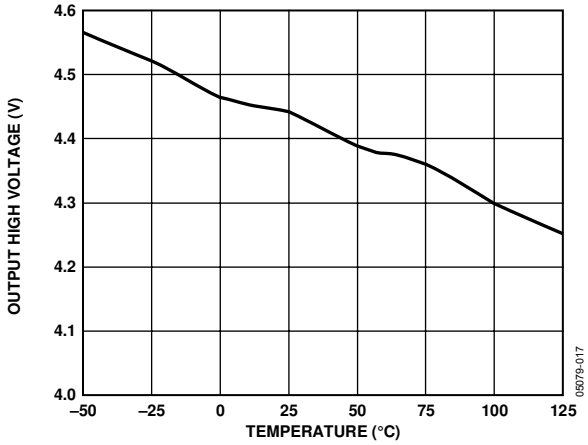

Figure 17. Receiver Output High Voltage vs. Temperature

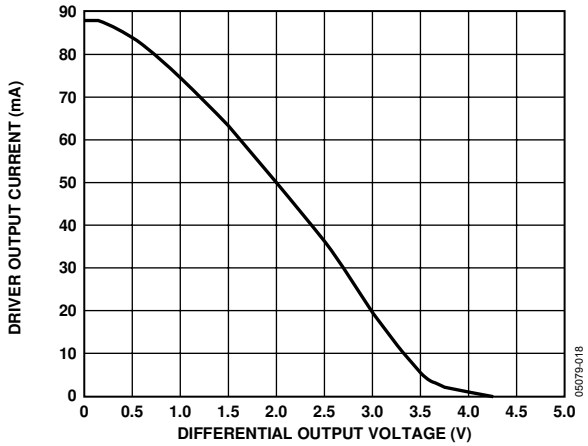

Figure 18. Driver Output Current vs. Differential Output Voltage

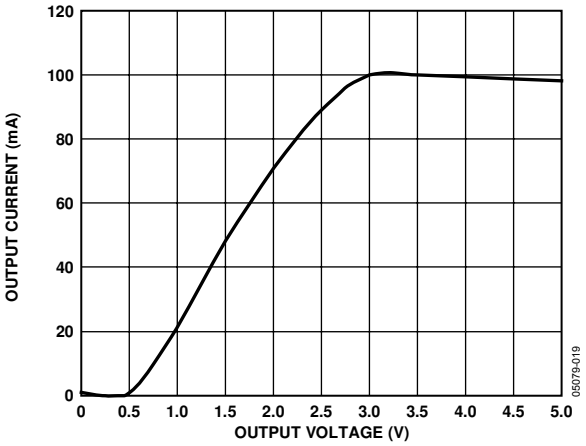

Figure 19. Output Current vs. Driver Output Low Voltage

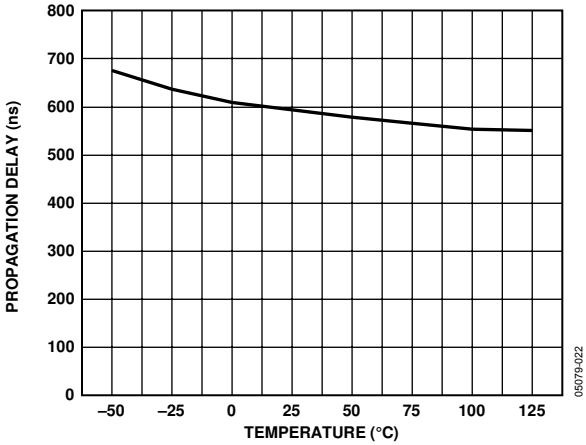

Figure 22. Receiver Propagation Delay vs. Temperature

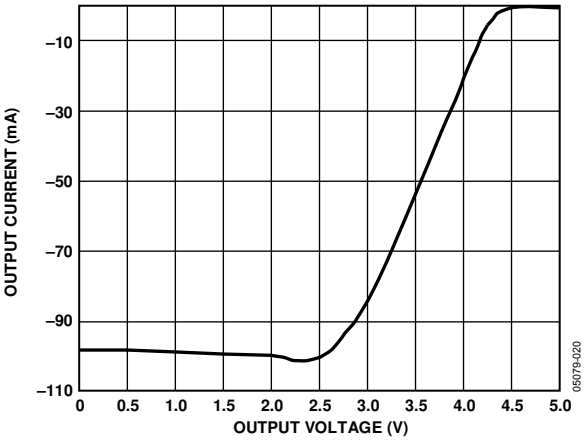

Figure 20. Output Current vs. Driver Output High Voltage

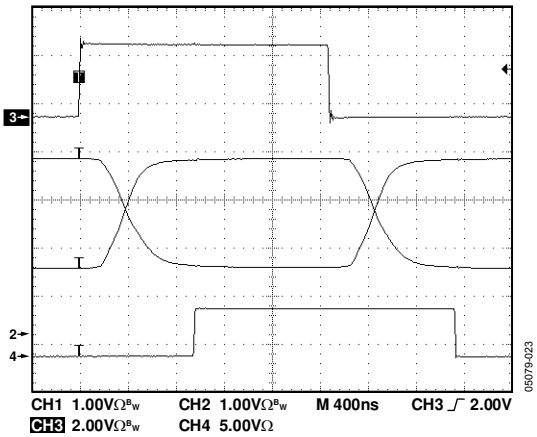

Figure 23. Driver/Receiver Propagation Delay

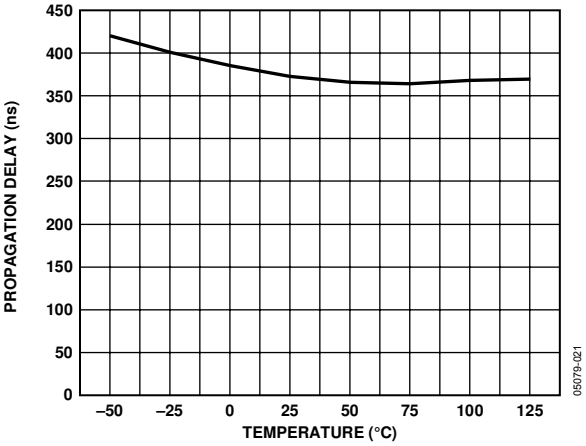

Figure 21. Driver Propagation Delay vs. Temperature

APPLICATIONS

DIFFERENTIAL DATA TRANSMISSION

Differential data transmission is used to reliably transmit data at high rates over long distances and through noisy environments. Differential transmission nullifies the effects of ground shifts and noise signals that appear as common-mode voltages on the line. There are two main standards approved by the Electronics Industries Association (EIA), which specify the electrical characteristics of transceivers used in differential data transmission.

The RS-422 standard specifies data rates up to 10 Mbaud and line lengths up to 4000 ft. A single driver can drive a transmission line with up to 10 receivers.

To achieve true multipoint communications, the RS-485 standard was defined. This standard meets or exceeds all the requirements of RS-422, but also allows up to 32 drivers and 32 receivers to be connected to a single bus. An extended common-mode range of −7 V to +12 V is defined. The most significant difference between RS-422 and RS-485 is that the drivers may be disabled, allowing up to 32 to be connected to a single line. Only one driver should be enabled at a time, but the RS-485 standard contains additional specifications to guarantee device safety in the event of line contention.

Table 5. Comparison of RS-422 and RS-485 Interface Standards

Specification	RS-422	RS-485
Transmission Type	Differential	Differential
Maximum Cable Length	4000 ft.	4000 ft.
Minimum Driver Output Voltage	±2 V	±1.5 V
Driver Load Impedance	100 Ω	54 Ω
Receiver Input Resistance	4 kΩ min	12 kΩ min
Receiver Input Sensitivity	±200 mV	±200 mV
Receiver Input Voltage Range	−7 V to +7 V	−7 V to +12 V
Drivers/Receivers per Line	1/10	32/32

CABLE AND DATA RATE

The preferred transmission line for RS-485 communications is a twisted pair. Twisted pair cable tends to cancel common-mode noise and the magnetic fields generated by the current flowing through each wire, thereby reducing the effective inductance of the pair.

The ADM483 is designed for bidirectional data communications on multipoint transmission lines. A typical application showing a multipoint transmission network is shown in Figure 24. An RS-485 transmission line can have as many as 32 transceivers on the bus. Only one driver can transmit at a particular time, but multiple receivers can be enabled simultaneously. As with any transmission line, it is important to minimize reflections. This can be done by terminating the extreme ends of the line by using resistors equal to the characteristic impedance of the line. Stub lengths of the main line should also be kept as short as possible. A properly terminated transmission line appears purely resistive to the driver.

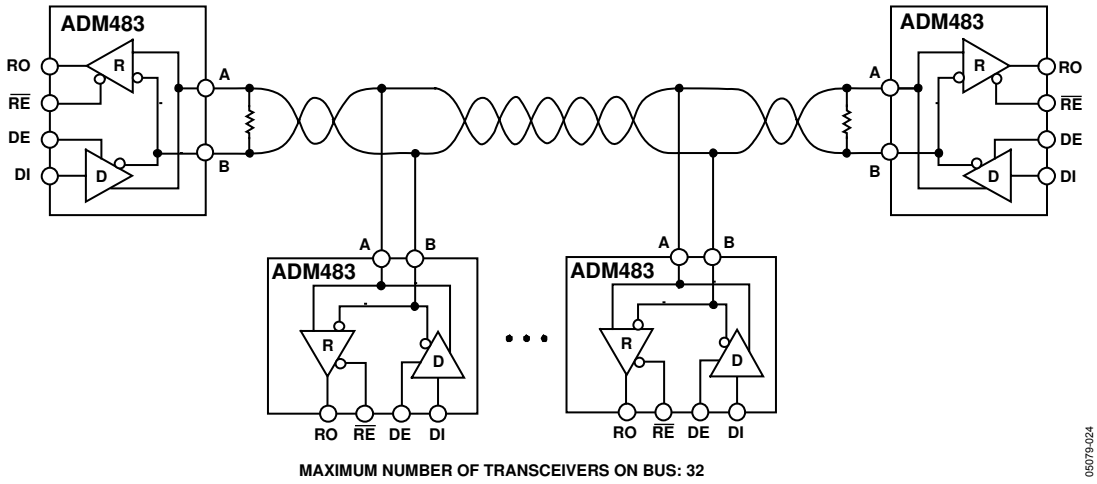

Figure 24. Typical Half-Duplex RS-485 Network Topology

THERMAL SHUTDOWN

The ADM483 contains thermal shutdown circuitry that protects the part from excessive power dissipation during fault conditions. Shorting the driver outputs to a low impedance source can result in high driver currents. The thermal sensing circuitry detects the increase in die temperature and disables the driver outputs. The thermal sensing circuitry is designed to disable the driver outputs when a die temperature of 150°C is reached. As the device cools, the drivers are re-enabled at 140°C.

RECEIVER OPEN-CIRCUIT FAIL-SAFE

The receiver input includes a fail-safe feature that guarantees a logic high on the receiver when the inputs are open circuit or floating.

OUTLINE DIMENSIONS

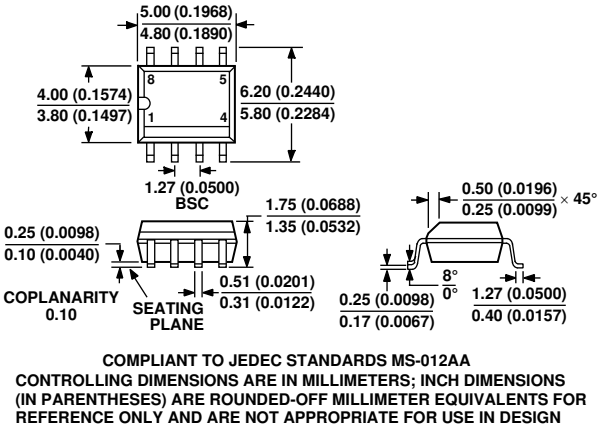

Figure 25. 8-Lead Standard Small Outline Package [SOIC]
(R-8)
Dimensions shown in millimeters and (inches)

ORDERING GUIDE

Model	Temperature Range	Package Description	Package Option
ADM483AR	–40°C to +85°C	8-Lead Standard Small Outline Package	R-8
ADM483AR-REEL	–40°C to +85°C	8-Lead Standard Small Outline Package	R-8
ADM483AR-REEL7	–40°C to +85°C	8-Lead Standard Small Outline Package	R-8
ADM483JR	0°C to 70°C	8-Lead Standard Small Outline Package	R-8
ADM483JR-REEL	0°C to 70°C	8-Lead Standard Small Outline Package	R-8
ADM483JR-REEL7	0°C to 70°C	8-Lead Standard Small Outline Package	R-8

NOTES

NOTES

NOTES

© 2004 Analog Devices, Inc. All rights reserved. Trademarks and registered trademarks are the property of their respective owners.
D05079-0-10/04(0)