Chipsmall Limited consists of a professional team with an average of over 10 year of expertise in the distribution of electronic components. Based in Hongkong, we have already established firm and mutual-benefit business relationships with customers from,Europe,America and south Asia,supplying obsolete and hard-to-find components to meet their specific needs.

With the principle of “Quality Parts,Customers Priority,Honest Operation,and Considerate Service”,our business mainly focus on the distribution of electronic components. Line cards we deal with include Microchip,ALPS,ROHM,Xilinx,Pulse,ON,Everlight and Freescale. Main products comprise IC,Modules,Potentiometer,IC Socket,Relay,Connector.Our parts cover such applications as commercial,industrial, and automotives areas.

We are looking forward to setting up business relationship with you and hope to provide you with the best service and solution. Let us make a better world for our industry!

Contact us

Tel: +86-755-8981 8866 Fax: +86-755-8427 6832
Email & Skype: info@chipsmall.com Web: www.chipsmall.com
Address: A1208, Overseas Decoration Building, #122 Zhenhua RD., Futian, Shenzhen, China

DATA CONTAINED IN THIS DOCUMENT IS PROPRIETARY TO TROMPETER ELECTRONICS INC. AND SHALL NOT BE DISCLOSED, COPIED OR USED FOR PROCUREMENT OR MANUFACTURE WITHOUT EXPRESS WRITTEN PERMISSION OF TROMPETER ELECTRONICS INC.

REVISIONS		12-20	SH 1
REV	DESCRIPTION	DATE	APPROVED
R	REVISED PER ECO 14973	3/11/03	WSZ

P2 CONN TYPE	FIG NO	P1 CONN TYPE: BJ20						UBJ20						BJ40						UBJ40						BJ120					
		SCHEMATICS																													
		E1	E2	E3	E4	E5	E7	E1	E2	E3	E4	E5	E7	E1	E2	E3	E4	E5	E7	E1	E2	E3	E4	E5	E7	E1	E2	E3	E4	E5	E7
		DASH NUMBERS																													
PL73	1A/B	-1	-2	-3	-4	-5	-121	-6	-7	-8	-9	-10	-127	-11	-12	-13	-14	-15	-133	-16	-17	-18	-19	-20	-139						
PL74	2A	-21	-22	-23	-24	-25	-122	-26	-27	-28	-29	-30	-128	-31	-32	-33	-34	-35	-134	-36	-37	-38	-39	-40	-140						
6 PL75	4	-41	-42	-43	-44	-45	-123	-46	-47	-48	-49	-50	-129	-51	-52	-53	-54	-55	-135	-56	-57	-58	-59	-60	-141	-225	-226	-227	-228	-229	-230
PL75FL	2A	-61	-62	-63	-64	-65	-124	-66	-67	-68	-69	-70	-130	-71	-72	-73	-74	-75	-136	-76	-77	-78	-79	-80	-142						
PL375	2B	-81	-82	-83	-84	-85	-125	-86	-87	-88	-89	-90	-131	-91	-92	-93	-94	-95	-137	-96	-97	-98	-99	-100	-143						
PL71	3	-101	-102	-103	-104	-105	-126	-106	-107	-108	-109	-110	-132	-111	-112	-113	-114	-115	-138	-116	-117	-118	-119	-120	-144						
PL74RG	2A	-221		-193				-222		-194				-223		-195				-224		-196									
6 PL75RG	4	-197	-198	-199	-200	-201	-202	-203	-204	-205	-206	-207	-208	-209	-210	-211	-212	-213	-214	-215	-216	-217	-218	-219	-220						

TABLE 1 6
POLARIZATION CHART

KEY LETTER	A°	B°	C°	COLOR BAND
NONE	120°	120°	120°	NONE
S	135°	135°	90°	WHITE
T	100°	150°	110°	RED
U	120°	130°	110°	ORANGE
V	115°	130°	115°	YELLOW
W	125°	110°	125°	GREEN
X	130°	100°	130°	BLUE
Y	110°	140°	110°	VIOLET
Z	100°	160°	100°	GRAY

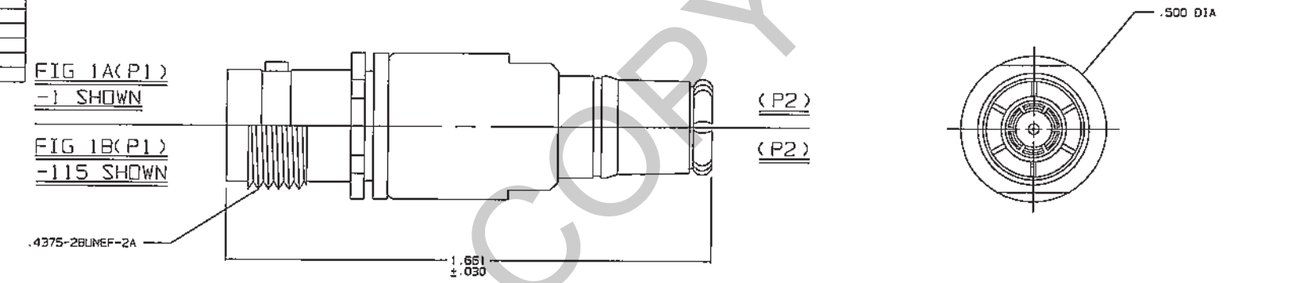

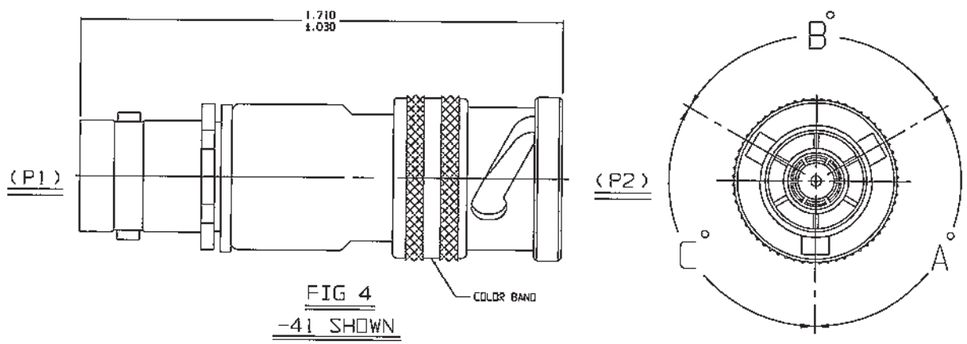

FIG 4
-41 SHOWN

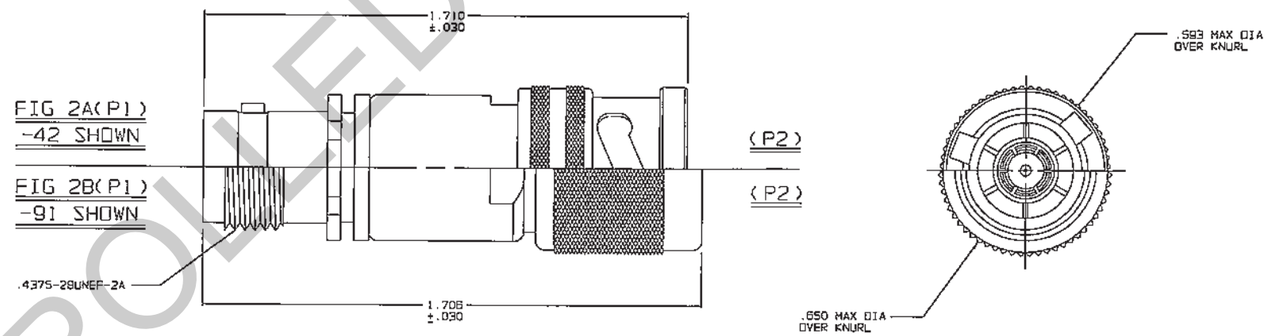

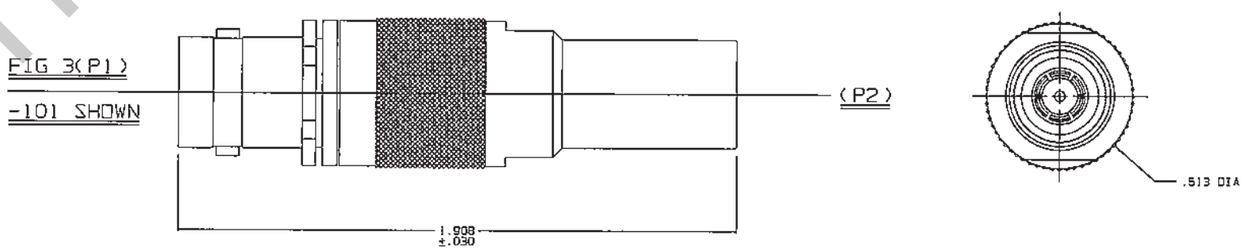

6 SEE TABLE 1 FOR POLARIZATION LETTER CODE

5. EXAMPLE OF COMPLETE MODEL NO:
AD - U BJ20 - E1 - PL75 RG X
ADAPTER
U=75 OHMS
(P1) CONN TYPE
SCHEMATIC
(P2) CONN TYPE
REVERSE GENDER; OMIT FOR NORMAL GENDER
POLARIZATION LETTER CODE; OMIT FOR NONE 6

4. EXAMPLE OF COMPLETE PART NO:
12-20-1X
BASIC PART NO
DASH NO
POLARIZATION LETTER CODE; OMIT FOR NORMAL GENDER 6

3. BETWEEN SERIES ADAPTER, 50 & 75 OHM BNC / TNC SERIES JACK TO "70" SERIES PLUG

2. FINISH: TFS-1A (NICKEL)

1. ALL DIM ARE IN INCHES

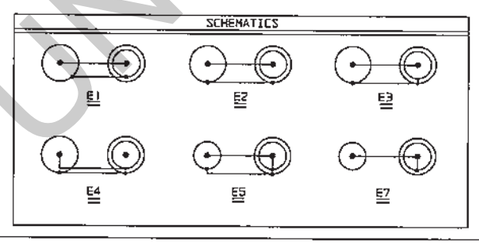

RED INDICATES ORIGINAL

UNCONTROLLED COPY

INTERPRET DRAWING PER MIL-STD-100 DIMENSIONS ARE IN INCHES AND INCLUDE FINISH THICKNESS UNLESS OTHERWISE SPECIFIED	TOL: UNLESS SPECIFIED .XX .XXX ± .005 .XXXX ANGLES	TROMPETER RF connectivity a cinch connectivity solutions brand	
DRAWN AAH 3-10-03	MATERIAL:	TITLE: ADAPTER; FEMALE BNC/ TNC SERIES TO MALE "70" SERIES	
CHECKED 3-10-03			
QUALITY 3/11/03	FINISH:		
MANUF 3/11/03		SIZE A · CAGE CODE 14949 · DRAWING NO. 12-20 · REV. R	
APPROVED 3/16/03			
NEXT ASSY · CAD FILE NO. 12-20R	DO NOT SCALE DWG	SCALE 2/1 · DATE: 12/15/86 · SHEET 1C	