Chipsmall Limited consists of a professional team with an average of over 10 year of expertise in the distribution of electronic components. Based in Hongkong, we have already established firm and mutual-benefit business relationships with customers from,Europe,America and south Asia,supplying obsolete and hard-to-find components to meet their specific needs.

With the principle of “Quality Parts,Customers Priority,Honest Operation,and Considerate Service”,our business mainly focus on the distribution of electronic components. Line cards we deal with include Microchip,ALPS,ROHM,Xilinx,Pulse,ON,Everlight and Freescale. Main products comprise IC,Modules,Potentiometer,IC Socket,Relay,Connector.Our parts cover such applications as commercial,industrial, and automotives areas.

We are looking forward to setting up business relationship with you and hope to provide you with the best service and solution. Let us make a better world for our industry!

Contact us

Tel: +86-755-8981 8866 Fax: +86-755-8427 6832
Email & Skype: info@chipsmall.com Web: www.chipsmall.com
Address: A1208, Overseas Decoration Building, #122 Zhenhua RD., Futian, Shenzhen, China

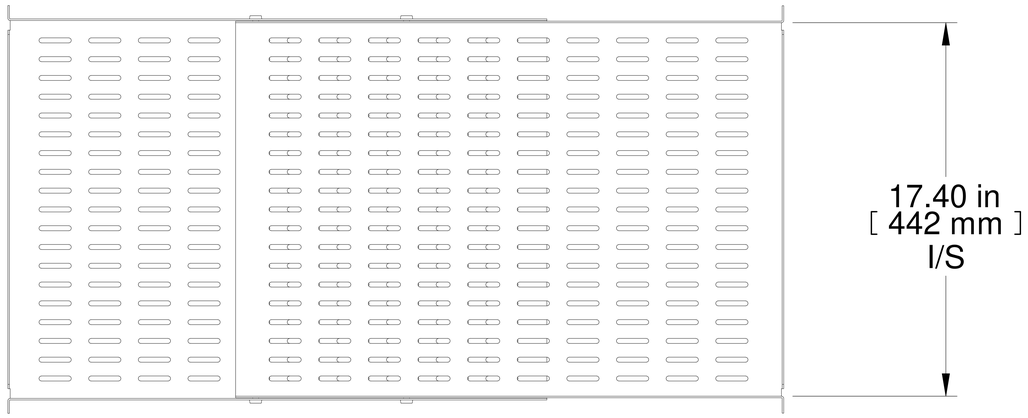

TOP VIEW

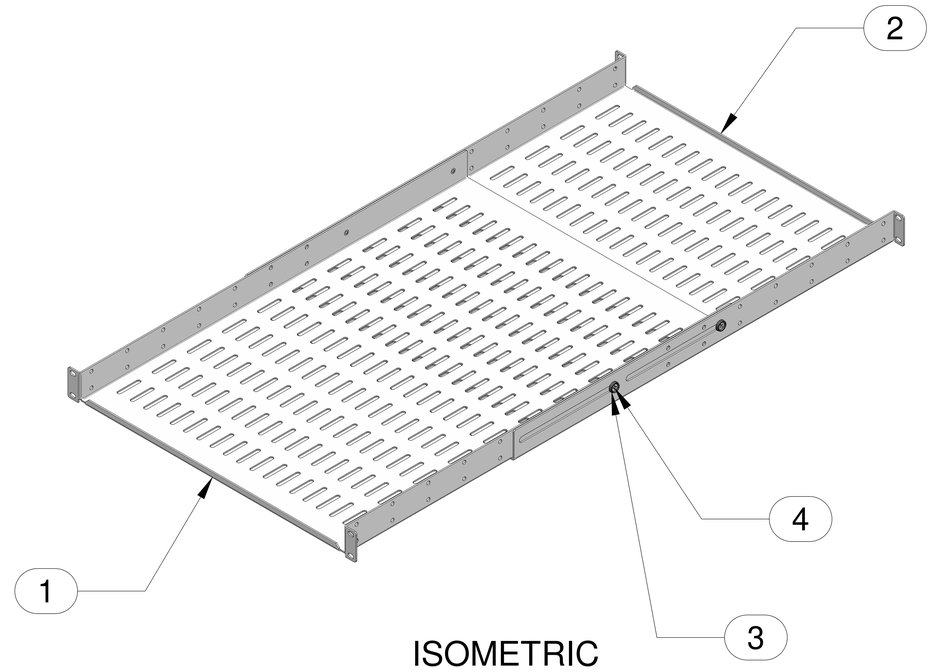

ISOMETRIC

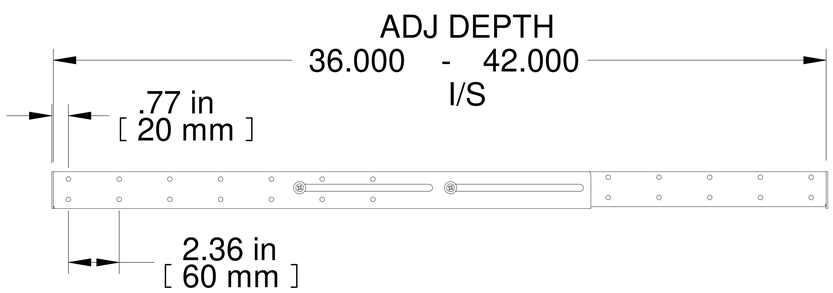

L.S. VIEW

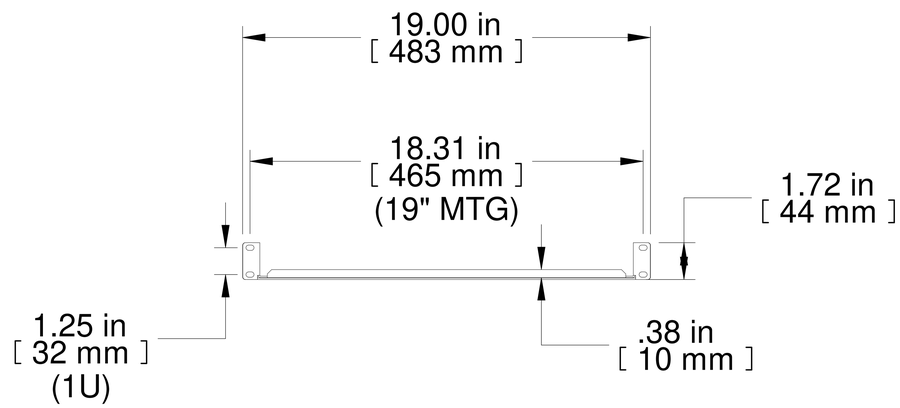

FRONT VIEW

Item Number	Title	Quantity
1	ADSV - VENTED SHELF FRONT (3642)	1
2	ADSV - VENTED SHELF REAR (3642)	1
3	#10 CUP WASHER BLK NYLON	4
4	SCREW - 10-32 X 1/4" CSK PH ZP	4

PART NUMBERS

ADSV3642BK	PAINTED BLACK TEXTURED

NOTES

Maximum Weight Load: 350 lb
Mounting Hardware Not Included
See Hammond Website for More Information

Français

Pour tous les détails sur nos produits,
svp veuillez consulter notre site www.hammondmfg.com

Data subject to change without notice. Isometric drawing not to scale.
Les données sont sujettes à changement sans préavis.

HAMMOND MANUFACTURING®

www.hammondmfg.com

PART NO. **ADSV3642BK**