Chipsmall Limited consists of a professional team with an average of over 10 year of expertise in the distribution of electronic components. Based in Hongkong, we have already established firm and mutual-benefit business relationships with customers from,Europe,America and south Asia,supplying obsolete and hard-to-find components to meet their specific needs.

With the principle of “Quality Parts,Customers Priority,Honest Operation,and Considerate Service”,our business mainly focus on the distribution of electronic components. Line cards we deal with include Microchip,ALPS,ROHM,Xilinx,Pulse,ON,Everlight and Freescale. Main products comprise IC,Modules,Potentiometer,IC Socket,Relay,Connector.Our parts cover such applications as commercial,industrial, and automotives areas.

We are looking forward to setting up business relationship with you and hope to provide you with the best service and solution. Let us make a better world for our industry!

Contact us

Tel: +86-755-8981 8866 Fax: +86-755-8427 6832
Email & Skype: info@chipsmall.com Web: www.chipsmall.com
Address: A1208, Overseas Decoration Building, #122 Zhenhua RD., Futian, Shenzhen, China

Signature	Revision History	Date	Rev.
Sean	For Bulk Production	Sep.17,2013	01

RoHS Compliant

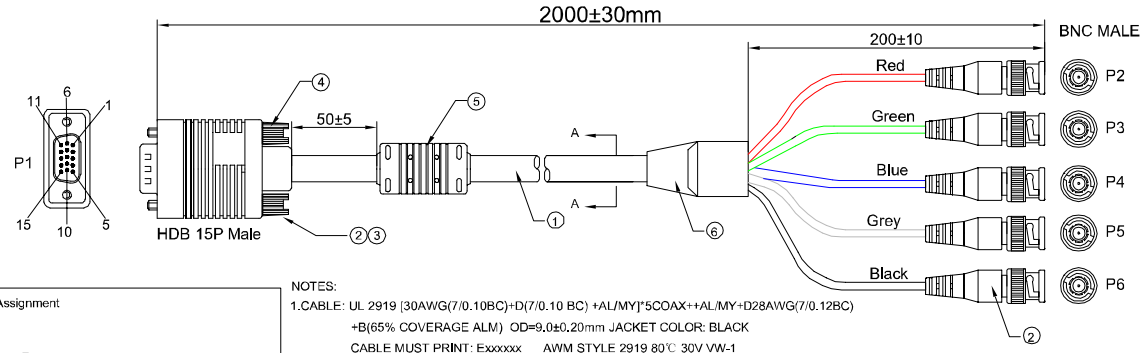

PIN Assignment

P1

1	P2 +	Red Video
6	P2 -	Red Shield
2	P3 +	Green Video
7	P3 +	Green Shield
3	P4	Blue Video
8	P4	Blue Shield
13	P5	Gray Horizontal Sync
11	P5-,P6-	Gray&Black Shield
14	P6+	Black Vertical Sync
Shell	Shell	

NOTES:

1.CABLE: UL 2919 [30AWG(7/0.10BC)+D(7/0.10 BC) +AL/MY]*5COAX++AL/MY+D28AWG(7/0.12BC)
+B(65% COVERAGE ALM) OD=9.0±0.20mm JACKET COLOR: BLACK
CABLE MUST PRINT: Exxxxxx AWM STYLE 2919 80℃ 30V VW-1

2.CONNECTOR:
P1: HDB 15P/M,SOLDER, BLUE INSULATION, GOLD FLASH PLATED CONTACTS, NICKEL PLATED SHELL
P2&P3&P4&P5&P6: BNC/M,SOLDER,WHITE INSULATION, GOLD FLASH PLATED CONTACTS, NICKEL PLATED SHELL

3.HOOD: MOLDED TYPE,ABS,COLOR:BLACK.

4.THUMB SCREW: #4-40 UNC, MOLDED TYPE,PVC 45P,COLOR:BLACK

5.FERRITE CORE: (Ø17.5 X Ø9.5 X 28.5mm), MOLDED BLACK PVC.

6.SR: MOLDED TYPE,PVC 45P,COLOR:BLACK.

7.ELECTRICLE TEST:
(1)100% OPEN SHORT & MIS WIRE TEST.
(2)CONTACT RESISTANCE 3 ohm Max .
(3)INSULATION RESISTANCE 10M ohm Min .
(4)HI-POT TEST:DC 300V/10ms

Cross Section:

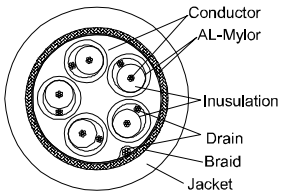

	Date	Name
Drawn by	Sep.17,2013	Sean
Checked by	Sep.17,2013	Joe
Approved by	Sep.17,2013	Andy

ASSMANN Electronic GmbH

80496

Part No. AK-310300-020-S

EAN:4016032287179

Title: HDB 15P/M - BNC*5 CABLE

Scale	N/A	Sheet 1/2
Unit	MM	

Package Details

RoHS Compliant

Single Cable

P/N	Cable Length	Rolling Size (Single Cable)	Polybag Type (Single Cable)	Bag Size (Single Cable)	Article Weight (Single Cable)
AK-310300-020-S	2.0m	150mm max.	Ordinary Polybag (Heat Sealed)	0.05mm	kg

Inner Packing Unit

P/N	Cable Length	Quantity (Inner Packing Unit)	Type (Inner Packing Unit)	Size (Inner Packing Unit)	Weight (Inner Packing Unit)
AK-310300-020-S	2.0m	pcs	Polybag (Heat Sealed)	mm	kg

CARTON DETAILS

P/N	Cable Length	Quantity (Carton)	Measurement (Carton)	N.W. (Carton)	G.W. (Carton)
AK-310300-020-S	2.0m	pcs	cm	kg	kg

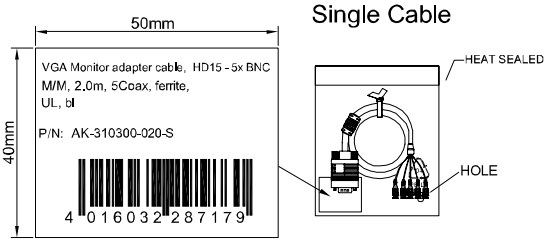

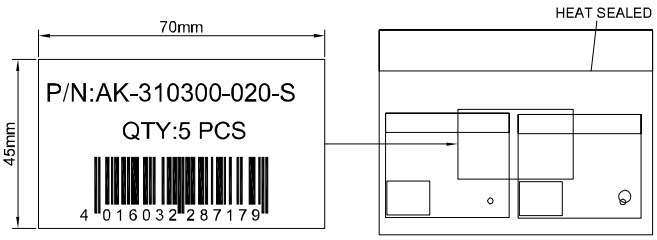

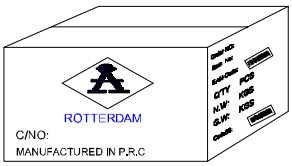

* "ROTTERDAM" is for Sea Freight shipment
* "COLOGNE" is for Air Freight shipment
* "LUDENSCHEID" is for Fedex or UPS shipment

	Date	Name
Drawn by	Sep.17,2013	Sean
Checked by	Sep.17,2013	Joe
Approved by	Sep.17,2013	Andy

ASSMANN Electronic GmbH

Part No. AK-310300-020-S

EAN:4016032287179

Title: HDB 15P/M - BNC*5 CABLE

Scale	N/A	Sheet 2/2
Unit	MM	

8049