Chipsmall Limited consists of a professional team with an average of over 10 year of expertise in the distribution of electronic components. Based in Hongkong, we have already established firm and mutual-benefit business relationships with customers from,Europe,America and south Asia,supplying obsolete and hard-to-find components to meet their specific needs.

With the principle of “Quality Parts,Customers Priority,Honest Operation,and Considerate Service”,our business mainly focus on the distribution of electronic components. Line cards we deal with include Microchip,ALPS,ROHM,Xilinx,Pulse,ON,Everlight and Freescale. Main products comprise IC,Modules,Potentiometer,IC Socket,Relay,Connector.Our parts cover such applications as commercial,industrial, and automotives areas.

We are looking forward to setting up business relationship with you and hope to provide you with the best service and solution. Let us make a better world for our industry!

Contact us

Tel: +86-755-8981 8866 Fax: +86-755-8427 6832
Email & Skype: info@chipsmall.com Web: www.chipsmall.com
Address: A1208, Overseas Decoration Building, #122 Zhenhua RD., Futian, Shenzhen, China

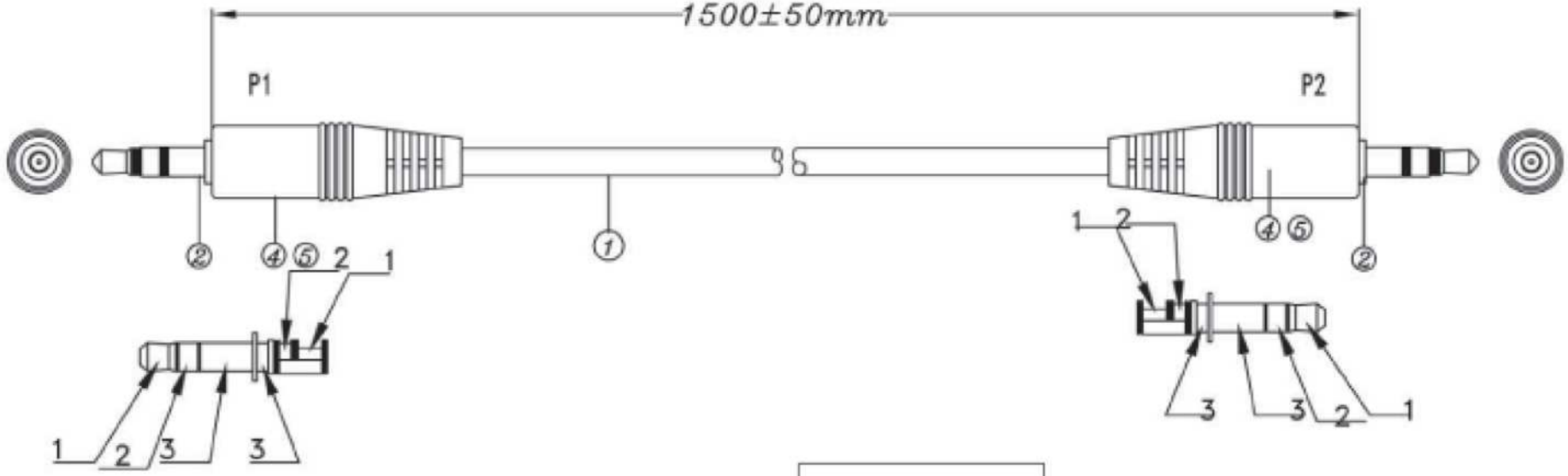

Electrical test:
1. 100% short, open, miswire test
2. Conduct resistance: 2 Ohm(max)
3. Insulation resistance: 1Mohm(min)
4. dielectric test: DC 300V

PIN ASSIGNMENT

P1		P2
1	RED	1
2	WHITE	2
3	S	3

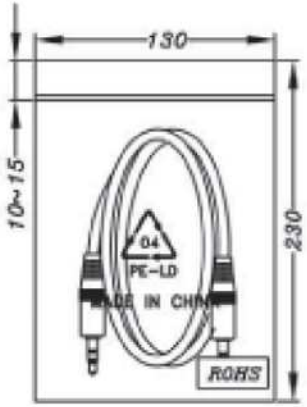

NO.	PART NO.	DESCRIPTION	VENDER	QTY	UNIT/REF
5		OUTER MODEL PVC 45P COLOR BLACK		4.8	g
4		ROUND TIN OD1.0mm		0.15	g
3		3.5 STEREO JACK OD8.0mm		1	P2
2		3.5 STEREO PLUG PLATE NICKEL L=30mm		1	P1
1		T.C (7/0.12*2C+43/0.12)*1C (RED,WHITE)#3.0 COLOR BLACK(CS-001)	01	1	1500mm

Scale	1:1
TOLERANCE	
X.X	±0.40
X.XX	±0.25
X.XXX	±0.15
Angle	±3°

Modification	Date	Name

		Name
Drawn	01.03.12	Chappell
Approved		

ASSMANN WSW components

RoHS Complaint

Item No.
AK-AV100 (1.50M)

Title
Stereo Connection Cable, 3-Pin, 3.5mm Stereo Male to 3.5mm Stereo Male

Drawing No.

rev00

Replace

Sheet