Chipsmall Limited consists of a professional team with an average of over 10 year of expertise in the distribution of electronic components. Based in Hongkong, we have already established firm and mutual-benefit business relationships with customers from,Europe,America and south Asia,supplying obsolete and hard-to-find components to meet their specific needs.

With the principle of “Quality Parts,Customers Priority,Honest Operation,and Considerate Service”,our business mainly focus on the distribution of electronic components. Line cards we deal with include Microchip,ALPS,ROHM,Xilinx,Pulse,ON,Everlight and Freescale. Main products comprise IC,Modules,Potentiometer,IC Socket,Relay,Connector.Our parts cover such applications as commercial,industrial, and automotives areas.

We are looking forward to setting up business relationship with you and hope to provide you with the best service and solution. Let us make a better world for our industry!

Contact us

Tel: +86-755-8981 8866 Fax: +86-755-8427 6832
Email & Skype: info@chipsmall.com Web: www.chipsmall.com
Address: A1208, Overseas Decoration Building, #122 Zhenhua RD., Futian, Shenzhen, China

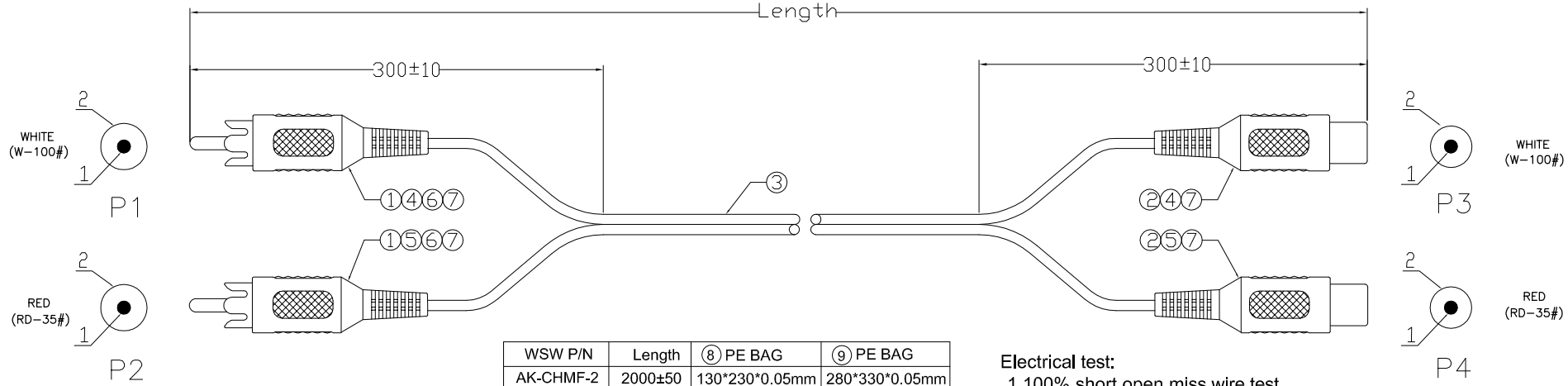

WSW P/N	Length	⑧ PE BAG	⑨ PE BAG
AK-CHMF-2	2000±50	130*230*0.05mm	280*330*0.05mm
AK-CHMF-015	1500±30	100*200*0.05mm	230*300*0.05mm
AK-CHMF-025	2500±50	130*230*0.05mm	280*330*0.05mm
AK-CHMF-050	5000±50	180*280*0.05mm	330*380*0.05mm

Electrical test:
1.100% short,open,miss wire test
2.Conduct resistance:5 Ohm(max)
3.Insulation resistance:5Mohm(min)
4.dielectric test:DC 300V

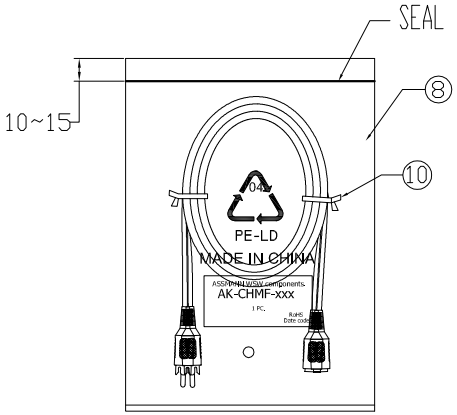

PIN ASSIGNMENT:

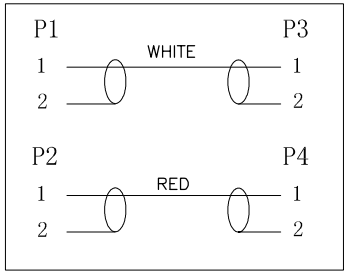

NO.	NAME	Q'TY	SPECIFICATION
⑩	TIE	2	BLACK
⑨	PE BAG	1/10	CLEAR PRINT BLACK"MADE IN CHINA"+"10PCS"
⑧	PE BAG	1	CLEAR PRINT BLACK"MADE IN CHINA"+"1PC"
⑦	TUBE	4	HEAT SHRINK TUBE BLACK OD1.5*10mm
⑥	IN JACKET	3.2g	CLEAR LD-PE(Mould NO.NM-006)
⑤	OUT JACKET	6.6g	PVC-40P RED(RD-35)
④	OUT JACKET	6.6g	PVC-40P WHITE(W-100)
③	CABLE	1	NOUL (10/0.10+28/0.10)*2F JACKET BLACK OD2.8*5.6mm
②	CONN	2	RCA PLUG FEMALE NI-PLATED INSULATOR COLOR:BROWN
①	CONN	2	RCA PLUG MALE BLOSSOM TYPE NI-PLATED INSULATOR COLOR:BROWN

RoHS compliant
Unit: mm

Scale	Free					Date	Name	Customer-No.
TOLERANCE					Drawn	20.02.2017	Amy	
					Approved	20.02.2017	Amy	ASSMANN WSW-No. AK-CHMF-xx
DIM	TOL							Drawing-No. ASS 7865 CA rev00
		⓪	Drawn	20.02.2017	Amy			
Angle	TOL	Id.	Modification	Date	Name			Replace / Sheet

ASSMANN WSW components