Chipsmall Limited consists of a professional team with an average of over 10 year of expertise in the distribution of electronic components. Based in Hongkong, we have already established firm and mutual-benefit business relationships with customers from,Europe,America and south Asia,supplying obsolete and hard-to-find components to meet their specific needs.

With the principle of “Quality Parts,Customers Priority,Honest Operation,and Considerate Service”,our business mainly focus on the distribution of electronic components. Line cards we deal with include Microchip,ALPS,ROHM,Xilinx,Pulse,ON,Everlight and Freescale. Main products comprise IC,Modules,Potentiometer,IC Socket,Relay,Connector.Our parts cover such applications as commercial,industrial, and automotives areas.

We are looking forward to setting up business relationship with you and hope to provide you with the best service and solution. Let us make a better world for our industry!

Contact us

Tel: +86-755-8981 8866 Fax: +86-755-8427 6832
Email & Skype: info@chipsmall.com Web: www.chipsmall.com
Address: A1208, Overseas Decoration Building, #122 Zhenhua RD., Futian, Shenzhen, China

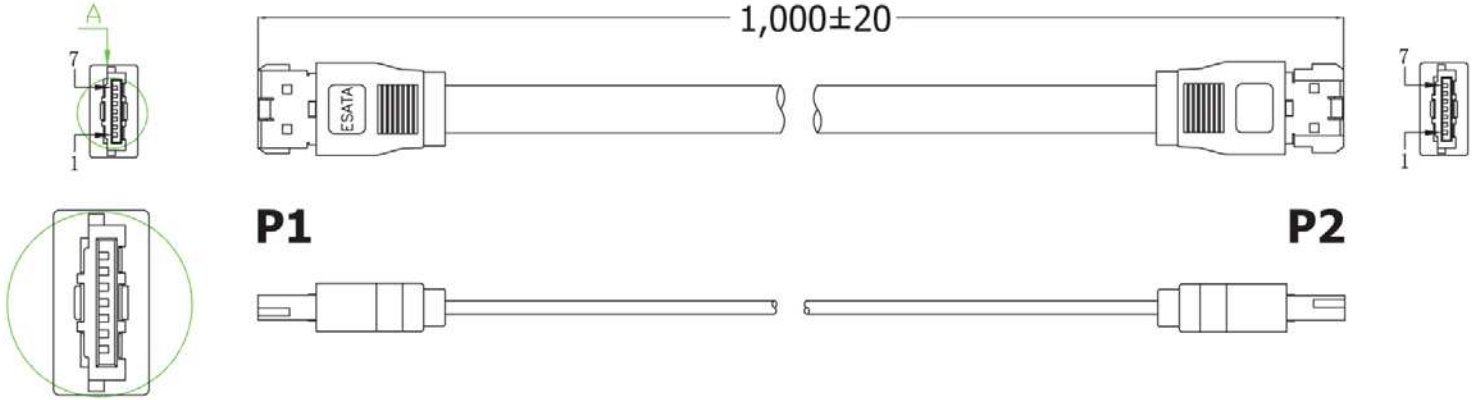

Section A-A
Scale 2:1

Pin Assignment

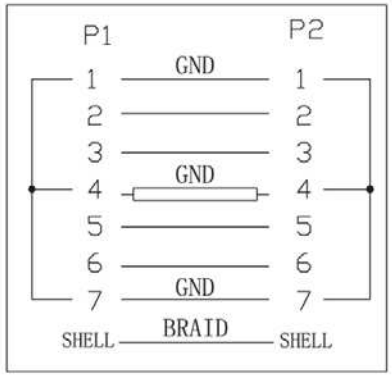

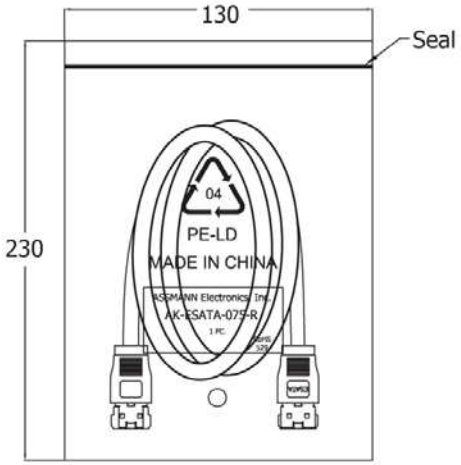

Material:

- Cable: UL2725 [26AWG(1/0.404)*2F INS:HD-PE+D/W(1/0.32)*2C+AL/MY]*2F
  - Inner Jacket PVC
  - OD 2.1*7.3MM +Braid(16/10/0.1)+PVC Jacket Color: Black OD 4.0*9.0MM
  - L730+5/-0MM
- Connectors: eSATA 7P/F Crimp Type
  - Pin G/F
  - Insulator Black
- Tube: Heat shrink tube Black OD 12MM L 10MM
- Acetate: Acetate cloth tape W 10MM * L 40MM
- Copper Foil: Double-Sided conductive copper foil W 10MM*L 30MM
- Outer Jacket: PVC 45P Color Black

Electrical:

- 100% Open Short & Miswire test
- Conductive resistance: 1Ω Max.
- Insulation Resistance: 10MΩ/Min.
- Hi-Pat Test 300V DC

Unit: MM

RoHS Complaint

Scale	1:1						Name
TOLERANCE					Drawn	12.29.11	Chappell
X.X	±0.40				Approved		
X.XX	±0.25						
X.XXX	±0.15						
Angle	±3°						
			Modification	Date	Name		

ASSMANN WSW components

Item No.
AK-ESATA-100

Title
External SATA (eSATA) Cable - 7P/F <=> 7P/F, 1M

Drawing No.

rev00

Replace

Sheet