Chipsmall Limited consists of a professional team with an average of over 10 year of expertise in the distribution of electronic components. Based in Hongkong, we have already established firm and mutual-benefit business relationships with customers from,Europe,America and south Asia,supplying obsolete and hard-to-find components to meet their specific needs.

With the principle of “Quality Parts,Customers Priority,Honest Operation,and Considerate Service”,our business mainly focus on the distribution of electronic components. Line cards we deal with include Microchip,ALPS,ROHM,Xilinx,Pulse,ON,Everlight and Freescale. Main products comprise IC,Modules,Potentiometer,IC Socket,Relay,Connector.Our parts cover such applications as commercial,industrial, and automotives areas.

We are looking forward to setting up business relationship with you and hope to provide you with the best service and solution. Let us make a better world for our industry!

Contact us

Tel: +86-755-8981 8866 Fax: +86-755-8427 6832
Email & Skype: info@chipsmall.com Web: www.chipsmall.com
Address: A1208, Overseas Decoration Building, #122 Zhenhua RD., Futian, Shenzhen, China

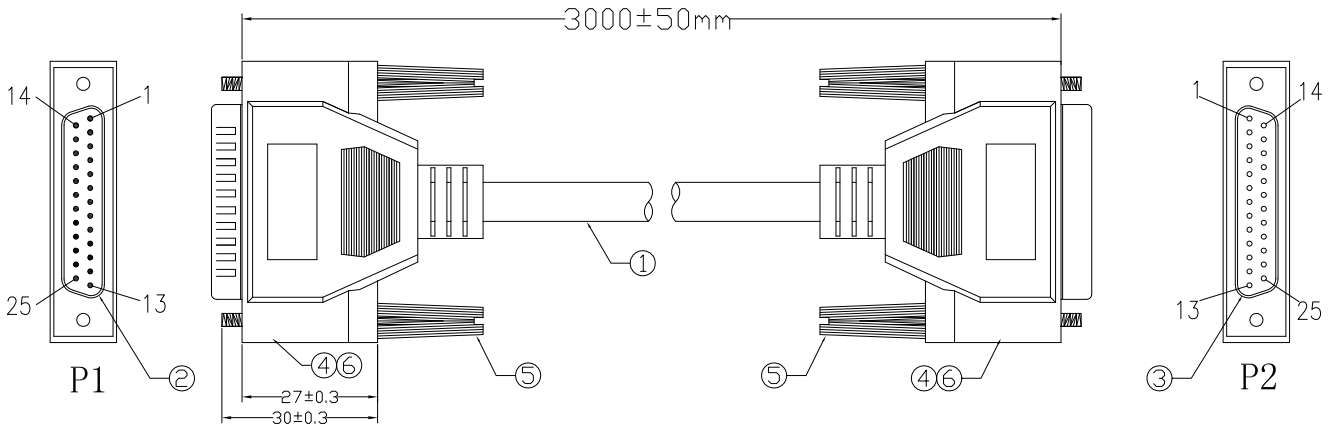

① PIN ASSIGNMENT

P1	P2
1	1
2	2
3	3
4	4
5	5
6	6
7	7
8	8
9	9
10	10
11	11
12	12
13	13
14	14
15	15
16	16
17	17
18	18
19	19
20	20
21	21
22	22
23	23
24	24
25	25
SHELL	SHELL

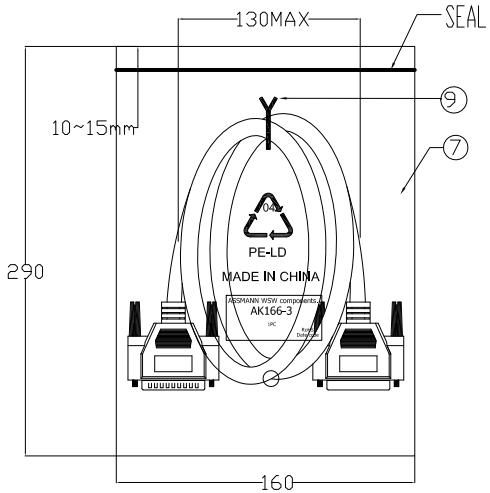

Electrical test:
1.100% short,open,miswire test
2.Conduct resistance: 5 ohm(max)
3.Insulation resistance: 10 Mohm(min)
4.dielectric test:DC 300V/10ms

NO.	NAME	Q'TY	SPECIFICATION
⑨	TIE	1	WHITE L=120mm
⑧	PE BAG	1/10	CLEAR SIZE:360*380*0.05mm PRINT BLACK"MADE IN CHINA"+"10PCS".
⑦	PE BAG	1	CLEAR SIZE:160*290*0.05mm PRINT BLACK"MADE IN CHINA".
⑥	TUBE	2	HEAT SHRINK TUBE BLACK OD1.5*20MM
⑤	SCREW	4	#4-40UNC TYPE D-E L=30mm,NICKEL PLATED,MOLD:BEIGE(IV-29) ABS
④	IN JACKET	18g	CLEAR LD-PE (Mould NO.:NM-33)
	OUT JACKET	60g	BEIGE(IV-29) 40P PVC(Mould NO.WM-017)
③	CONN	1	DB 25P FEMALE SODER TYPE PIN G/F SHELL NI-PLATED INSULATOR COLOR:BLUE
②	CONN	1	DB 25P MALE SOLDER TYPE PIN G/F SHELL NI-PLATED INSULATOR COLOR:BLUE
①	CABLE	1	NOUL 28#*25C+D+AL/MY OD6.5mm JACKET BEIGE(IV-29) L=3000±10mm

RoHS compliant
Unit: mm

Scale	Free
TOLERANCE	
DIM	TOL
Angle	TOL

Id.	Modification	Date	Name
①	Delete the wire color for pin assignment	04.09.2017	Fred
⓪	Drawn	20.02.2017	Amy

	Date	Name
Drawn	20.02.2017	Amy
Approved	04.09.2017	Fred

ASSMANN WSW components

Customer-No.

ASSMANN WSW-No. AK166-3

Drawing-No. ASS 7887 CA

rev01

Replace

Sheet