Chipsmall Limited consists of a professional team with an average of over 10 year of expertise in the distribution of electronic components. Based in Hongkong, we have already established firm and mutual-benefit business relationships with customers from,Europe,America and south Asia,supplying obsolete and hard-to-find components to meet their specific needs.

With the principle of “Quality Parts,Customers Priority,Honest Operation,and Considerate Service”,our business mainly focus on the distribution of electronic components. Line cards we deal with include Microchip,ALPS,ROHM,Xilinx,Pulse,ON,Everlight and Freescale. Main products comprise IC,Modules,Potentiometer,IC Socket,Relay,Connector.Our parts cover such applications as commercial,industrial, and automotives areas.

We are looking forward to setting up business relationship with you and hope to provide you with the best service and solution. Let us make a better world for our industry!

Contact us

Tel: +86-755-8981 8866 Fax: +86-755-8427 6832
Email & Skype: info@chipsmall.com Web: www.chipsmall.com
Address: A1208, Overseas Decoration Building, #122 Zhenhua RD., Futian, Shenzhen, China

HDB 15 Male
Plastic: Blue

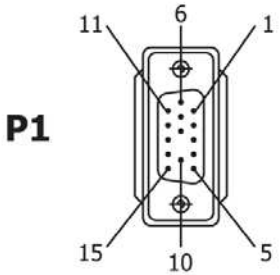

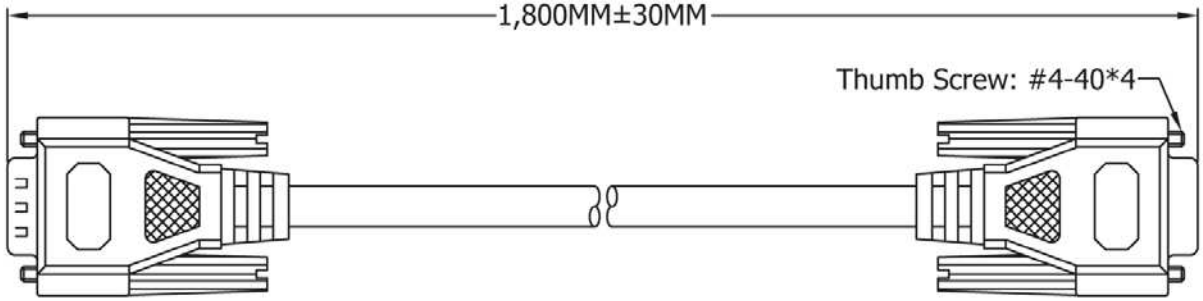

HDB 15 Female
Plastic: Blue

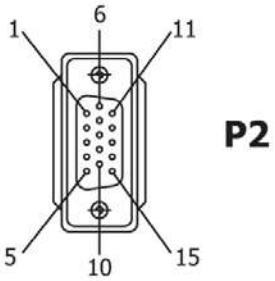

PIN OUT

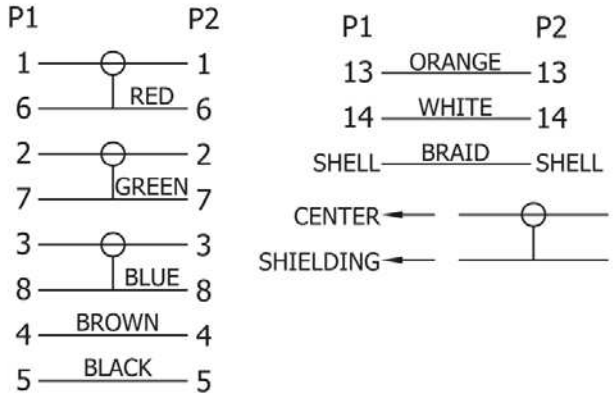

Material:

1.CABLE:28AWG(7/0.127 T.C)*3COAX(75 OHMS)+INSULATION:FO-PE INNER JACKET:PVC OD:Ø2.5± 0.1mm(UL-1354)+28AWG(7/0.127 T.C)*4C+ INSULATION:SR-PVC ID:Ø0.85± 0.05mm(UL-1061)+AL/MY+DRAIN WIRE:26AWG(7/0.16 T.C)+BRAID SHIELD(85%)+OUTER JACKET:PVC COLOR:BEIGE, OD:Ø 8.1± 0.15mm UL-2919

2.CONNECTOR:
P1:HDB 15P MALE,GOLD FLASH CONTACT,NICKEL PLATED SHELL (9TH PIN UNLOAD)
P2:HDB 15P FEMALE,GOLD FLASH CONTACT,NICKEL PLATED SHELL

3.SHIELD:COPPER-FOIL 360° SOLDERED TO CONNECTOR SHELL & CABLE BRA

4.HOOD:MOLDED TYPE,PVC 45P,COLOR:BEIGE.

5.ELECTRONIC TEST:
<1>.100% OPEN SHORT & MIS WIRE TEST
<2>.CONTACT RESISTANCE 3 OHMS MAX
<3>.INSULATION RESISTANCE 20 M OHMS MIN

6.PACKING:SEE P-0039 REV.C PACKING DRAWING
(HANKING SIZE MUST BE SMALLER THAN PACKING)
PACKING TYPE: DB VP4.

RoHS Complaint

Scale	1:1						Name
TOLERANCE							
X.X	±0.40				Drawn	11.15.11	Chappell
X.XX	±0.25				Approved		
X.XXX	±0.15						
Angle	±3°						
			Modification	Date	Name		

ASSMANN WSW components

Item No.
AK3220-1.8

Title
Premium VGA Monitor extension cable - HD D-Sub 15-pin Male <=> Female, 1.8 Meters

Drawing No.

rev00

Replace

Sheet