Chipsmall Limited consists of a professional team with an average of over 10 year of expertise in the distribution of electronic components. Based in Hongkong, we have already established firm and mutual-benefit business relationships with customers from,Europe,America and south Asia,supplying obsolete and hard-to-find components to meet their specific needs.

With the principle of “Quality Parts,Customers Priority,Honest Operation,and Considerate Service”,our business mainly focus on the distribution of electronic components. Line cards we deal with include Microchip,ALPS,ROHM,Xilinx,Pulse,ON,Everlight and Freescale. Main products comprise IC,Modules,Potentiometer,IC Socket,Relay,Connector.Our parts cover such applications as commercial,industrial, and automotives areas.

We are looking forward to setting up business relationship with you and hope to provide you with the best service and solution. Let us make a better world for our industry!

Contact us

Tel: +86-755-8981 8866 Fax: +86-755-8427 6832
Email & Skype: info@chipsmall.com Web: www.chipsmall.com
Address: A1208, Overseas Decoration Building, #122 Zhenhua RD., Futian, Shenzhen, China

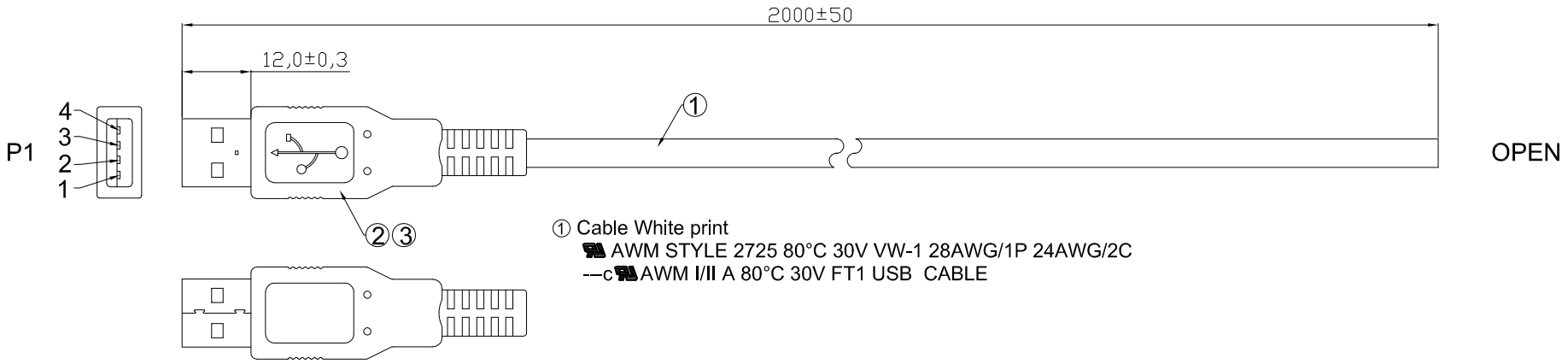

① Cable White print
AWM STYLE 2725 80°C 30V VW-1 28AWG/1P 24AWG/2C
--c AWM I/II A 80°C 30V FT1 USB CABLE

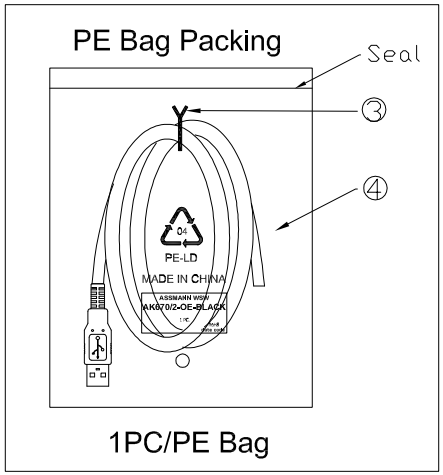

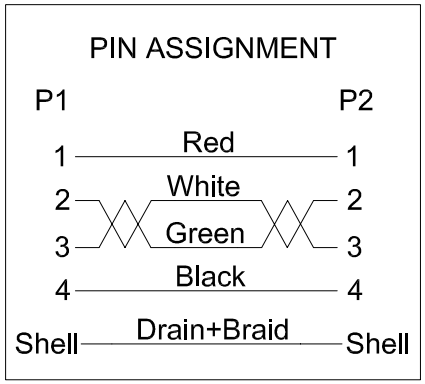

Electrical test:
1. 100% short, open, miss wire test
2. Conduct resistance: 2 Ohm max.
3. Insulator resistance: 5MΩ min.
4. Dielectric test: DC 300V

NO.	NAME.	Q'TY	SPECIFICATION
⑤	PE Bag	1	Clear Print black "MADE IN CHINA"+ "1PC"
④	TIE	1	Black
③	Out Jacket	NA	Black PVC-45P
②	CONN	1	USB A Male Shell:Nickel Pin:G/F Insulator color:White
①	Cable	1	USB2.0 UL2725 28#/1P+24#/2C+AEB OD:4.7mm Black

RoHS compliant
Unit: mm

Scale	Free				Date	Name	Customer-No.
TOLERANCE				Drawn	10.12.2015	Joanna	
				Approved	09.05.2016	Amy	ASSMANN WSW-No. AK670/2-OE-BLACK
DIM	TOL	①	Update the drawing	09.05.2016	Amy		Drawing-No. ASS 7474 CA rev01
		⓪	Drawn	10.12.2015	Joanna		
Angle	TOL	Id.	Modification	Date	Name		Replace / Sheet

ASSMANN WSW components

KK2292