Chipsmall Limited consists of a professional team with an average of over 10 year of expertise in the distribution of electronic components. Based in Hongkong, we have already established firm and mutual-benefit business relationships with customers from,Europe,America and south Asia,supplying obsolete and hard-to-find components to meet their specific needs.

With the principle of “Quality Parts,Customers Priority,Honest Operation,and Considerate Service”,our business mainly focus on the distribution of electronic components. Line cards we deal with include Microchip,ALPS,ROHM,Xilinx,Pulse,ON,Everlight and Freescale. Main products comprise IC,Modules,Potentiometer,IC Socket,Relay,Connector.Our parts cover such applications as commercial,industrial, and automotives areas.

We are looking forward to setting up business relationship with you and hope to provide you with the best service and solution. Let us make a better world for our industry!

Contact us

Tel: +86-755-8981 8866 Fax: +86-755-8427 6832
Email & Skype: info@chipsmall.com Web: www.chipsmall.com
Address: A1208, Overseas Decoration Building, #122 Zhenhua RD., Futian, Shenzhen, China

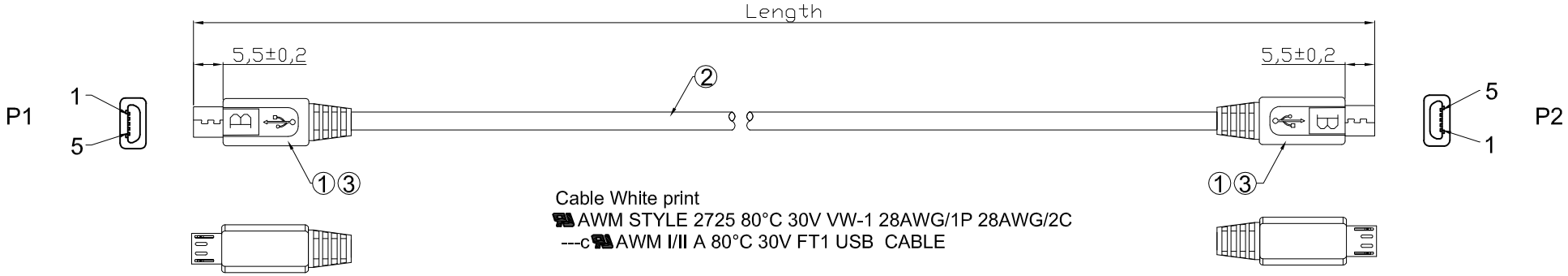

Cable White print
AWM STYLE 2725 80°C 30V VW-1 28AWG/1P 28AWG/2C
---c AWM I/II A 80°C 30V FT1 USB CABLE

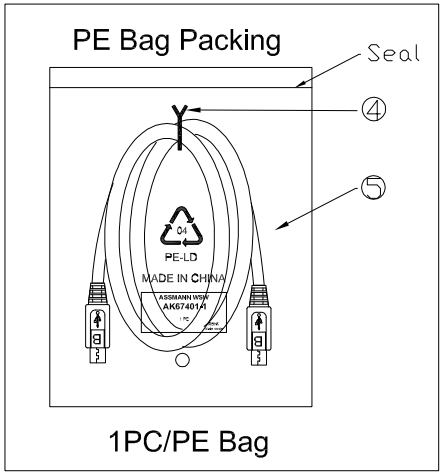

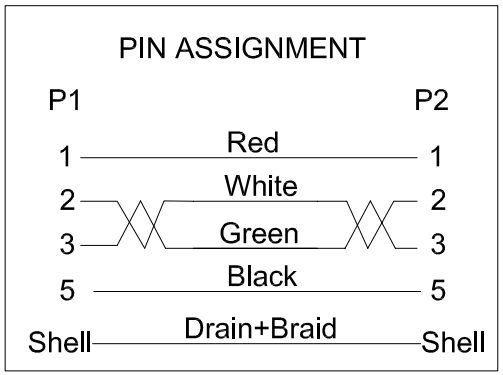

WSW P/N	Jacket color	Length(mm)
AK67401-0.5	Black	500±15
AK67401-1	Black	1000±20
AK67401-2	Black	2000±20
AK67401-3	Black	3000±30
AK67401-5	Black	5000±50

Electrical test:
1. 100% short, open, miss wire test
2. Conduct resistance: 2 Ohm max.
3. Insulator resistance: 5Mohm min.
4. Dielectric test: DC 300V

NO.	NAME.	SPECIFICATION	Q'TY	Unit
⑤	PE Bag	Clear Print black "MADE IN CHINA"+ "1PC"	1	PCS
④	TIE	Black	1	PCS
③	Out Jacket	Black PVC-45P	NA	G
②	Cable	USB2.0 UL2725 (28#*1P+AL)+28#/2C+AEB Black OD:3.5mm	1	PCS
①	CONN	USB 2.0 Micro 5P B Male Shell:Nickel Pin:G/F Insulator color: black	2	PCS

RoHS compliant
Unit: mm

Scale	Free					Date	Name	Customer-No.
TOLERANCE					Drawn	26.07.2016	Amy	
					Approved	26.07.2016	Amy	ASSMANN WSW-No. AK67401-x
DIM	TOL							Drawing-No. ASS 7722 CA rev00
		⓪	Drawn	26.07.2016	Amy			
Angle	TOL	Id.	Modification	Date	Name			Replace / Sheet

ASSMANN wsw components