Chipsmall Limited consists of a professional team with an average of over 10 year of expertise in the distribution of electronic components. Based in Hongkong, we have already established firm and mutual-benefit business relationships with customers from,Europe,America and south Asia,supplying obsolete and hard-to-find components to meet their specific needs.

With the principle of “Quality Parts,Customers Priority,Honest Operation,and Considerate Service”,our business mainly focus on the distribution of electronic components. Line cards we deal with include Microchip,ALPS,ROHM,Xilinx,Pulse,ON,Everlight and Freescale. Main products comprise IC,Modules,Potentiometer,IC Socket,Relay,Connector.Our parts cover such applications as commercial,industrial, and automotives areas.

We are looking forward to setting up business relationship with you and hope to provide you with the best service and solution. Let us make a better world for our industry!

Contact us

Tel: +86-755-8981 8866 Fax: +86-755-8427 6832
Email & Skype: info@chipsmall.com Web: www.chipsmall.com
Address: A1208, Overseas Decoration Building, #122 Zhenhua RD., Futian, Shenzhen, China

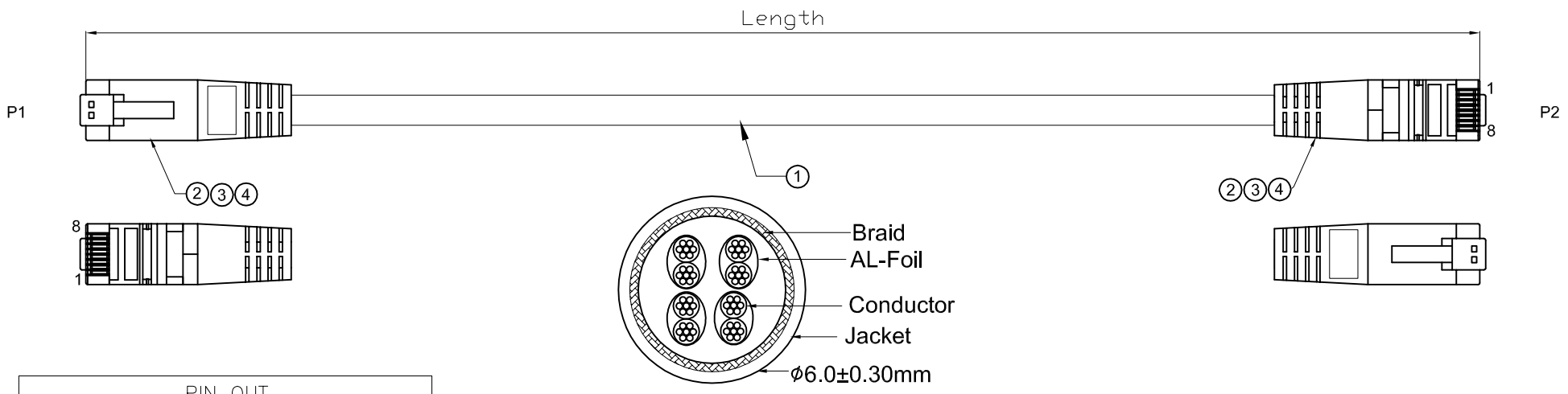

PIN OUT

P1	COLOR	P2
1	WHITE	1
2	ORANGE	2
3	WHITE	3
6	GREEN	6
4	BLUE	4
5	WHITE	5
7	WHITE	7
8	BROWN	8
SHELL	BRAID	SHELL

TEST CONDITION:
1.1OO% OPEN & SHORT TESTING
2.VOLTAGE:300V DC
3.INSULATION RESISTANCE:10M ohm
4.CONTACT RESISTANCE:3 ohm(1M~3M)
5 ohm(5M~10M)
8 ohm(15M)

NO:	NAME	DESCRIPTION	Q'TY	UNIT
④	AL-FOIL	Conductive AL-FOIL:W=8mm L=28mm	2	PCS
③	OVERMOLD	75A PVC Color: see order code	N/A	G
②	CONNECT	CAT 6 RJ45 8P8C PLUG Brass 3u" gold,Shell:Nickel plated	2	PCS
①	CABLE	LAN CAT6 SSTP (24AWG*1P+AL)*4+BRAID, OD:6.0±0.3mm JACKET COLOR:see order code	1	PCS

WSW order code
AMJS0909-xxxx-xxB-24

Cable length	Cable&Molding color
0030: 0.3±0.015M	BK: Black
0050: 0.5±0.02M	RD: Red
0100: 1.0±0.03M	YE: Yellow
0150: 1.5±0.03M	GN: Green
0200: 2.0±0.05M	GY: Grey
0300: 3.0±0.08M	BU: Blue
0500: 5.0±0.15M	WH: White
0700: 7.0±0.25M	BN: Brown
1000: 10±0.30M	
1500: 15±0.50M	

RoHS compliant
Unit: mm

Scale	Free					Date	Name	Customer-No.
TOLERANCE					Drawn	30.03.2017	Amy	
					Approved	30.03.2017	Amy	ASSMANN WSW-No. AMJS0909-xxxx-xxB-24
DIM	TOL							Drawing-No. ASS 7950 CA rev00
		⓪	Drawn	30.03.2017	Amy			
Angle	TOL	Id.	Modification	Date	Name			Replace / Sheet

ASSMANN wsw components