Chipsmall Limited consists of a professional team with an average of over 10 year of expertise in the distribution of electronic components. Based in Hongkong, we have already established firm and mutual-benefit business relationships with customers from,Europe,America and south Asia,supplying obsolete and hard-to-find components to meet their specific needs.

With the principle of “Quality Parts,Customers Priority,Honest Operation,and Considerate Service”,our business mainly focus on the distribution of electronic components. Line cards we deal with include Microchip,ALPS,ROHM,Xilinx,Pulse,ON,Everlight and Freescale. Main products comprise IC,Modules,Potentiometer,IC Socket,Relay,Connector.Our parts cover such applications as commercial,industrial, and automotives areas.

We are looking forward to setting up business relationship with you and hope to provide you with the best service and solution. Let us make a better world for our industry!

Contact us

Tel: +86-755-8981 8866 Fax: +86-755-8427 6832
Email & Skype: info@chipsmall.com Web: www.chipsmall.com
Address: A1208, Overseas Decoration Building, #122 Zhenhua RD., Futian, Shenzhen, China

BUD	PART NAME	NEMA DIE CAST ALUM. ENCLOSURE W/MTG. BRKT	PART No.	AN-2811-A & AN-2811-AB	REVISION DATE	9-30-15

UL LISTED FOR U.S. AND CANADA - FILE #E194432

TYPE RATING 4, 4X, 6, 6P, 12 AND 13, COMPARE TO IP-68

80°C. MAXIMUM OPERATING TEMPERATURE

UPDATE REPLACES PART NO. AN-2811 & AN-2811-B

DRAWING FOR REFERENCE

WE RESERVE THE RIGHT TO MAKE CHANGES TO OUR STANDARD PRODUCTS. PLEASE CONSULT WITH BUD INDUSTRIES PRIOR TO USING THIS DRAWING FOR DESIGN PURPOSE.

BODY

COVER NOT SHOWN

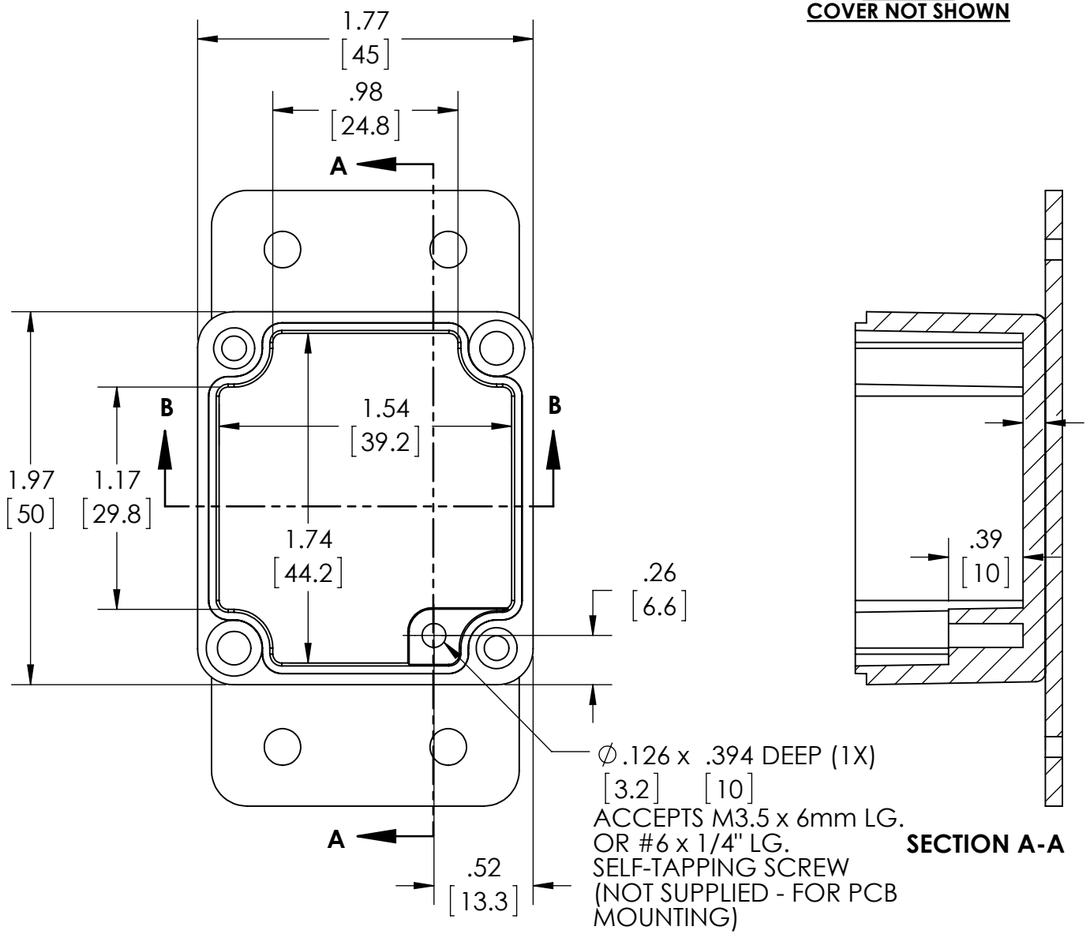

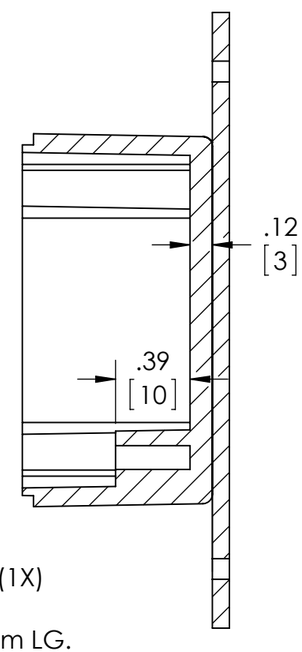

SECTION A-A

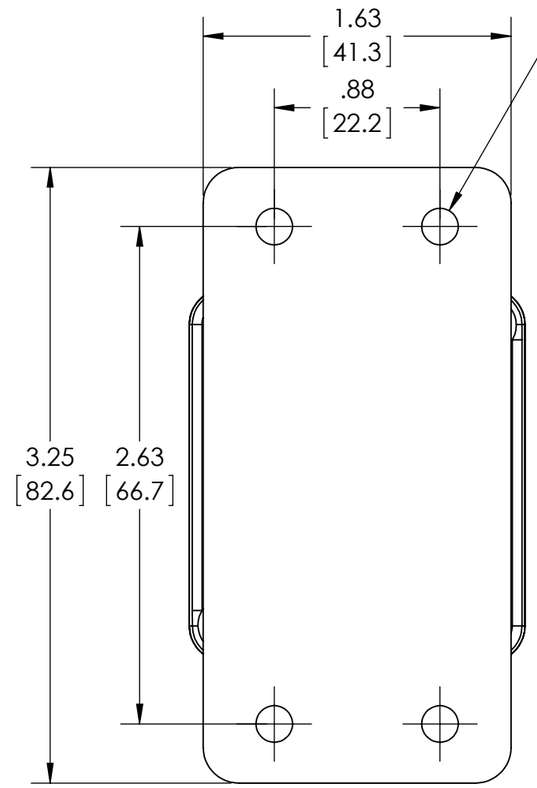

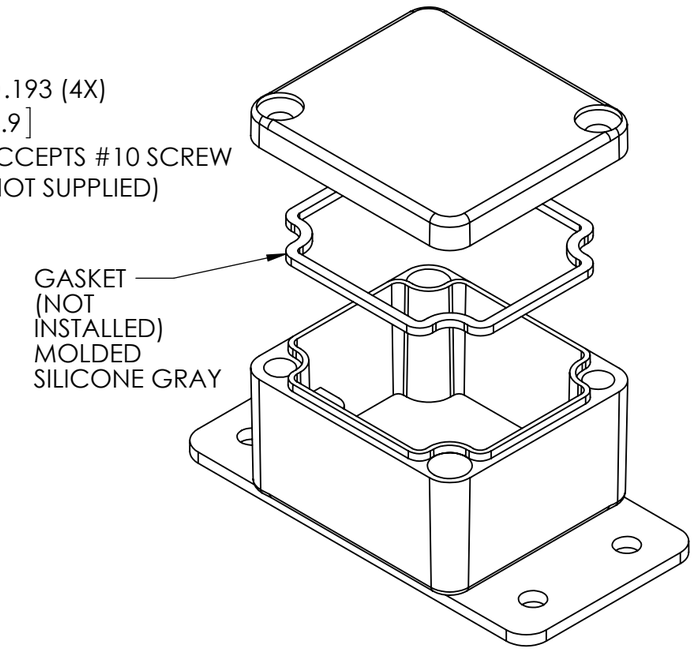

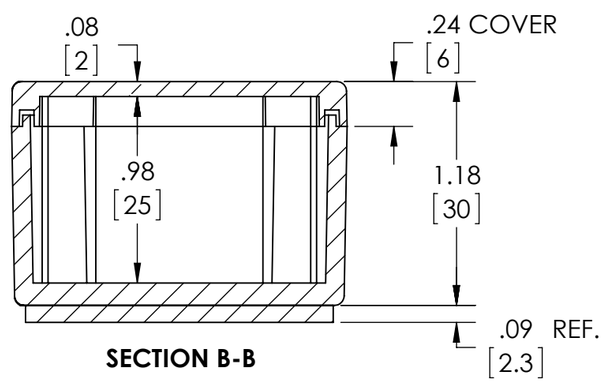

SECTION B-B

MATERIAL: BODY & COVER - ALUMINUM ALLOY #ADC-12
MOUNTING BRACKET - .09 THK. ALUMINUM (3003-H14)

FINISH: NATURAL (SUFFIX -A)
SMOOTH BLACK POWDERCOAT (SUFFIX -AB)

FOUR (4) M4x0.7 x 20mm (.79") LG. 90°CSK. HEAD STAINLESS STEEL SCREWS SUPPLIED FOR ASSEMBLY OF COVER TO BODY. APPLY AT 12 IN./LB. OF TORQUE.

OUTSIDE AND INSIDE DRAFT ANGLE: 1°
DIMENSIONS ARE INCH[MM]

OPTIONAL ACCESSORIES:
PCB MOUNTING KIT #57-58
INTERNAL PANEL #ANX-91311
REPLACEMENT GASKET #1311GSKTSC

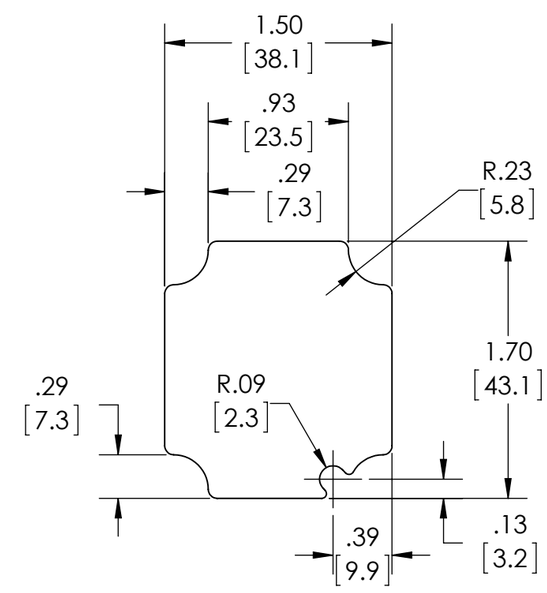

OPTIONAL INTERNAL PANEL AND SUGGESTED PC BOARD LAYOUT