Chipsmall Limited consists of a professional team with an average of over 10 year of expertise in the distribution of electronic components. Based in Hongkong, we have already established firm and mutual-benefit business relationships with customers from,Europe,America and south Asia,supplying obsolete and hard-to-find components to meet their specific needs.

With the principle of “Quality Parts,Customers Priority,Honest Operation,and Considerate Service”,our business mainly focus on the distribution of electronic components. Line cards we deal with include Microchip,ALPS,ROHM,Xilinx,Pulse,ON,Everlight and Freescale. Main products comprise IC,Modules,Potentiometer,IC Socket,Relay,Connector.Our parts cover such applications as commercial,industrial, and automotives areas.

We are looking forward to setting up business relationship with you and hope to provide you with the best service and solution. Let us make a better world for our industry!

Contact us

Tel: +86-755-8981 8866 Fax: +86-755-8427 6832
Email & Skype: info@chipsmall.com Web: www.chipsmall.com
Address: A1208, Overseas Decoration Building, #122 Zhenhua RD., Futian, Shenzhen, China

Product Standards

Part No.	AN44075A
Package Code No.	HSOP034-P-0300A

Semiconductor Company
Matsushita Electric Industrial Co., Ltd.

Established by	Applied by	Checked by	Prepared by
K.Komichi	M.Hiramatsu	H.Nobekawa	T.Nagano

2007-11-12	
Established	Revised

Contents

AN44075A

Driver IC for DC Motor

■ Overview

AN44075A is a one channel H-bridge driver IC. 1-ch. DC motor can be controlled by a single driver IC.

■ Features

- Built-in thermal protection and low voltage detection circuit
- Built-in over current protection (when external resistance is added to Pin 7 and Pin 8.)
- Built-in 5 V power supply

■ Applications

- IC for DC motor drives

■ Package

- 34 pin Plastic Small Outline Package with Back Heat Sink (SOP Type)

■ Type

- Bi-CDMOS IC

■ Application Circuit Example

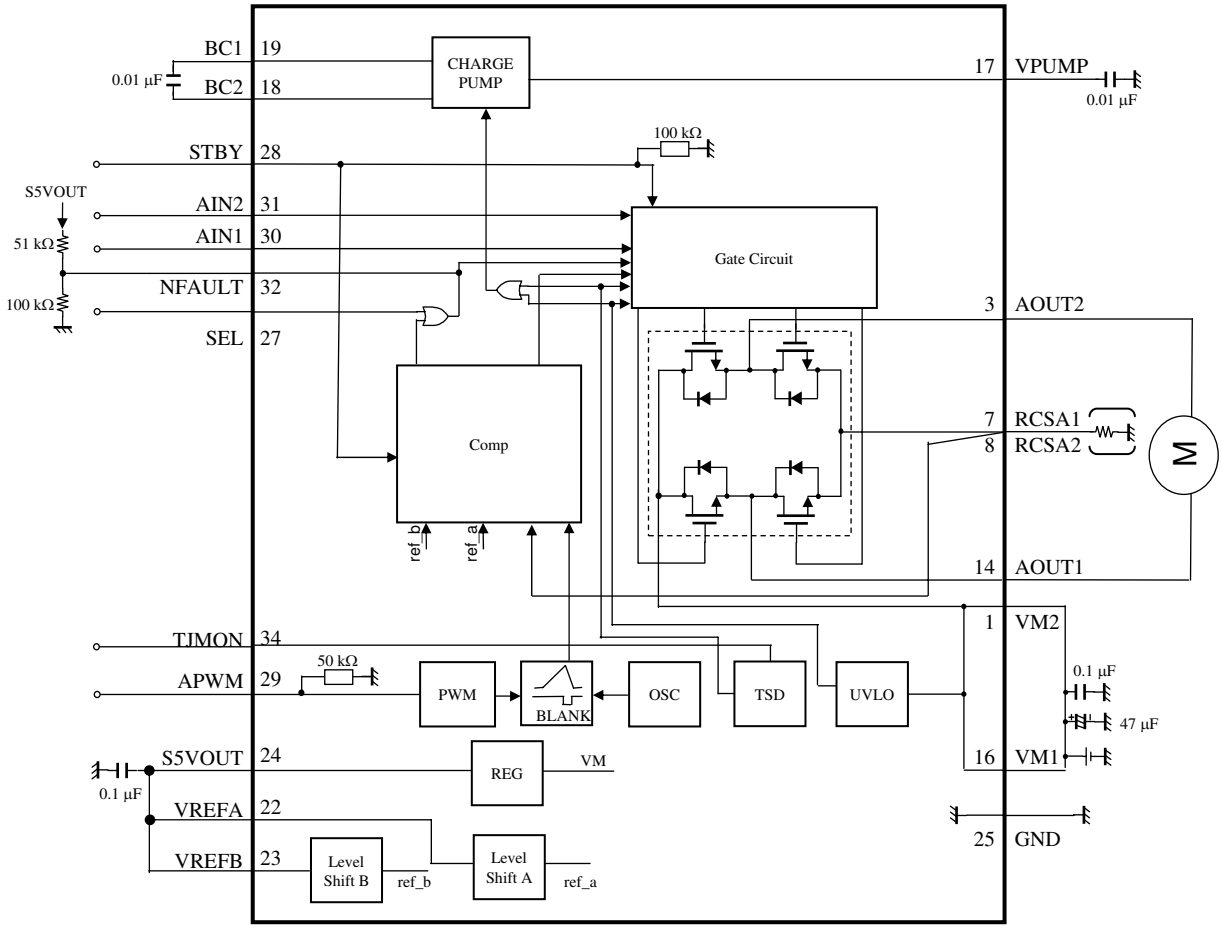

Note) • This application circuit is shown as an example but does not guarantee the design for mass production set.

■ Block Diagram

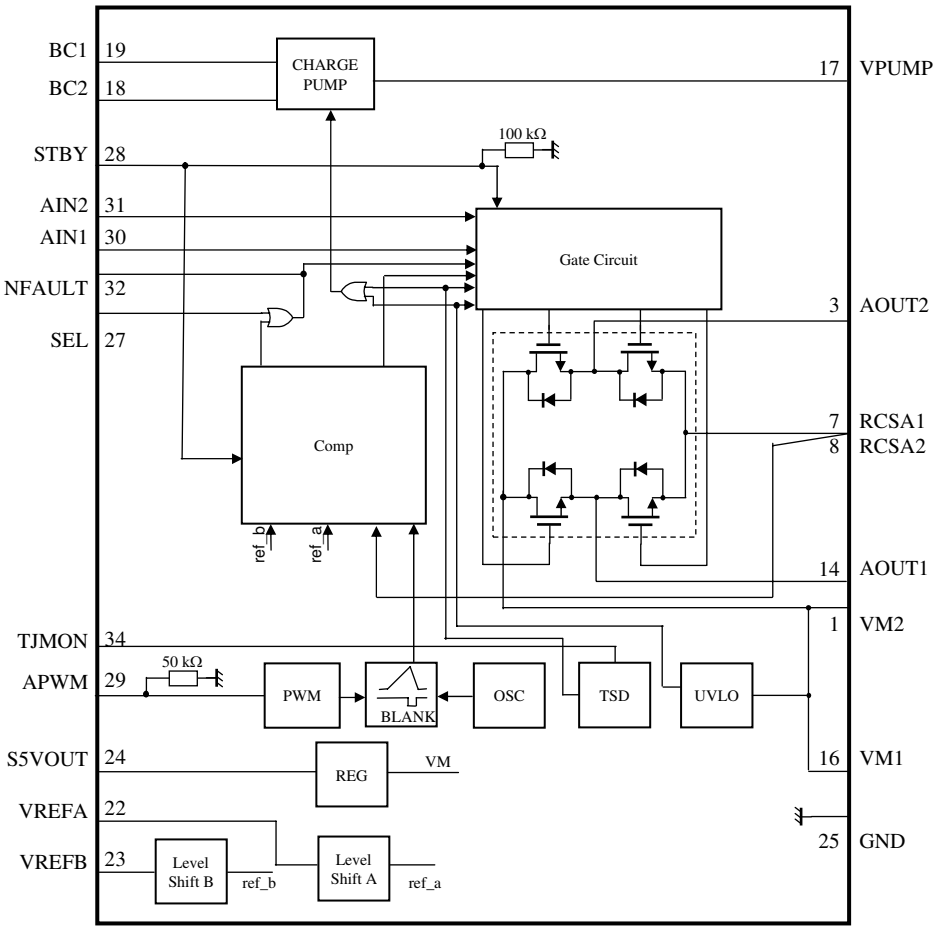

Note) This block diagram is for explaining functions. The part of the block diagram may be omitted, or it may be simplified.

■ Pin Descriptions

Pin No.	Pin name	Type	Description
1	VM2	Power supply	Motor power supply 2
2	N.C.	—	not used
3	AOUT2	Output	Motor drive output 2
4	N.C.	—	not used
5	N.C.	—	not used
6	N.C.	—	not used
7	RCSA1	Input / Output	Current detection 1
8	RCSA2	Input / Output	Current detection 2
9	GND	Ground	Die pad ground
10	N.C.	—	not used
11	N.C.	—	not used
12	N.C.	—	not used
13	N.C.	—	not used
14	AOUT1	Output	Motor drive output 1
15	N.C.	—	not used
16	VM1	Power supply	Motor power supply 1
17	VPUMP	Output	Charge Pump circuit output
18	BC2	Output	Charge Pump capacitor connection 2
19	BC1	Output	Charge Pump capacitor connection 1
20	N.C.	—	not used
21	N.C.	—	not used
22	VREFA	Input	Peak current setting input
23	VREFB	Input	Load short threshold input
24	S5VOUT	Output	Internal reference voltage (5 V output)
25	GND	Ground	Signal ground
26	GND	Ground	Die pad ground
27	SEL	Input	Test mode input
28	STBY	Input	Standby input
29	APWM	Input	PWM input
30	AIN1	Input	Forward-Reverse input
31	AIN2	Input	Brake mode input
32	NFAULT	Output	Abnormal detection output
33	N.C.	—	not used
34	TJMON	Output	VBE monitor

■ Absolute Maximum Ratings

Note) Absolute maximum ratings are limit values which are not destructed, and are not the values to which operation is guaranteed.

A No.	Parameter	Symbol	Rating	Unit	Note
1	Supply voltage1 (Pin 1, Pin 16)	V_M	37	V	*1
2	Power dissipation	P_D	0.466	W	*2
3	Operating ambient temperature	T_{opr}	−20 to +70	°C	*3
4	Storage temperature	T_{stg}	−55 to +150	°C	*3
5	Output pin voltage (Pin 3, Pin 14)	V_{OUT}	37	V	*4
6	Motor drive current (Pin 3, Pin 14)	I_{OUT}	±3.0	A	*4, *5
7	Flywheel diode current (Pin 3, Pin 14)	I_f	3.0	A	*4, *5

Notes) *1 : The values under the condition not exceeding the above absolute maximum ratings and the power dissipation.

*2 : The power dissipation shown is the value at T_a = 70°C for the independent (unmounted) IC package without a heat sink.
When using this IC, refer to the P_D-T_a diagram of the package standard and design the heat radiation with sufficient margin so that the allowable value might not be exceeded based on the conditions of power supply voltage, load, and ambient temperature.

*3 : Except for the power dissipation, operating ambient temperature, and storage temperature, all ratings are for T_a = 25°C.

*4 : Do not apply current or voltage from outside to any pin not listed above.
In the circuit current, (+) means the current flowing into IC and (−) means the current flowing out of IC.

*5 : It is the rating value when connecting the heat sink on the rear face of the package to the ground pattern on the glass epoxy 4-layered PCB.
(the ground area in the second and third layer : more than 1 500 mm²)

■ Operating Supply Voltage Range

Parameter	Symbol	Range	Unit	Note
Operating supply voltage range	V_M	10.0 to 35.0	V	*

Note) * : The values under the condition not exceeding the above absolute maximum ratings and the power dissipation.

■ Allowed Voltage and Current Ranges

Notes) • Rating Voltage is voltage of pin on GND
• Do not apply current or voltage from outside to any pin not listed below.

Pin No.	Pin name	Rating	Unit	Note
7	RCSA1	+2.5	V	—
8	RCSA2	+2.5	V	—
17	VPUMP	$(V_M - 2)$ to 43	V	—
18	BC2	$(V_M - 1)$ to 43	V	—
19	BC1	$V_M + 0.3$	V	—
22	VREFA	–0.3 to 6	V	—
23	VREFB	–0.3 to 6	V	—
24	S5VOUT	–7 to 0	mA	*1
27	SEL	–0.3 to 6	V	—
28	STBY	–0.3 to 6	V	—
29	APWM	–0.3 to 6	V	—
30	AIN1	–0.3 to 6	V	—
31	AIN2	–0.3 to 6	V	—
32	NFAULT	–0.3 to 6	V	—
32	NFAULT	4	mA	—

Note) *1 : It is the rating when using with the rang of VM = 16 V to 35 V. When VM = 10 V to 15 V, the rating is –4 mA.

■ Electrical Characteristics at V_M = 24 V

Note) T_a = 25°C±2°C unless otherwise specified.

B No.	Parameter	Symbol	Test circuits	Conditions	Limits			Unit	Note
					Min	Typ	Max		
Output drivers									
1	High-level output saturation voltage	V_{OH}	1	$I_{SA1} = I_{SA2} = -1$ A	$V_M - 0.47$	$V_M - 0.36$	—	V	—
2	Low-level output saturation voltage	V_{OL}	1	$I_{SA1} = I_{SA2} = 1$ A	—	0.50	0.65	V	—
3	Flywheel diode forward voltage	V_{DI}	2	$I_{DI} = \pm 1$ A	0.5	1.0	1.5	V	—
4	Output leakage current	I_{LEAK}	1	$V_M = 37$ V, $V_{SRCS} = 0$ V	—	10	20	μA	—
Power supply									
5	Supply current 1 (Sleep)	I_{M1}	1	$V_{STBY} = 0$ V	—	65	105	μA	—
6	Supply current 2 (with circuit turned on)	I_{M2}	1	$V_{STBY} = 5$ V	—	7.3	12	mA	—
7	Reference voltage	V_{S5VOUT}	1	$I_{S5VOUT} = -2.5$ mA	4.5	5.0	5.5	V	—
8	Output impedance	Z_{S5VOUT}	1	$\Delta I_{S5VOUT} = -5$ mA	—	18	27	Ω	—
IN input									
9	High-level IN input voltage	V_{INH}	1	—	2.1	—	5	V	—
10	Low-level IN input voltage	V_{INL}	1	—	0	—	0.6	V	—
11	High-level IN input current	I_{INH}	1	$V_{AIN1} = V_{AIN2} = 5$ V	–10	—	10	μA	—
12	Low-level IN input current	I_{INL}	1	$V_{AIN1} = V_{AIN2} = 0$ V	–10	—	10	μA	—
Standby input									
13	High-level STBY input voltage	V_{STBYH}	1	—	2.1	—	5	V	—
14	Low-level STBY input voltage	V_{STBYL}	1	—	0	—	0.6	V	—
15	High-level STBY input current	I_{STBYH}	1	$V_{STBY} = 5$ V	30	—	80	μA	—
16	Low-level STBY input current	I_{STBYL}	1	$V_{STBY} = 0$ V	–10	—	10	μA	—
PWM input									
17	High-level PWM input voltage	V_{PWMH}	1	—	2.1	—	5	V	—
18	Low-level PWM input voltage	V_{PWML}	1	—	0	—	0.6	V	—
19	High-level PWM input current	I_{PWMH}	1	$V_{APWM} = 5$ V	60	—	150	μA	—
20	Low-level PWM input current	I_{PWML}	1	$V_{APWM} = 0$ V	–10	—	10	μA	—
21	PWM Input Max frequency	f_{PWM}	1	—	—	—	200	kHz	—
22	Input Min pulse width	t_W	1	—	2	—	—	μs	—

■ Electrical Characteristics (continued) at V_M = 24 V

Note) T_a = 25°C±2°C unless otherwise specified.

B No.	Parameter	Symbol	Test circuits	Conditions	Limits			Unit	Note
					Min	Typ	Max		
Peak current detection / Over current protection									
23	Input bias current	I_{REF}	1	V_{REFA} = V_{REFB} = 5 V	83	100	125	μA	—
24	PWM frequency	f_{PWM}	1	V_{REFA} = 0 V, V_{REFB} = 5 V	17	26	35	kHz	—
25	Pulse blanking time	T_B	1	V_{REFA} = 0 V, V_{REFB} = 5 V	1.5	2.5	4.5	μs	—
26	Comp threshold 1	VT_{H1}	1	V_{REFA} = V_{REFB} = 5 V	480	500	520	mV	—
27	Comp threshold 2	VT_{H2}	1	V_{REFA} = 5.5 V, V_{REFB} = 2.5 V	475	500	525	mV	—
28	NFAULT output voltage	V_{NFLT}	1	I_{NFLT} = 1 mA	—	—	0.4	V	—

■ Electrical Characteristics (Reference values for design) at V_M = 24 V

Notes) T_a = 25°C±2°C unless otherwise specified.
The characteristics listed below are reference values derived from the design of the IC and are not guaranteed by inspection.
If a problem does occur related to these characteristics, we will respond in good faith to user concerns.

B No.	Parameter	Symbol	Test circuits	Conditions	Reference values			Unit	Note
					Min	Typ	Max		
Output drivers									
29	Output slew rate 1	VT_r	—	Rising edge	—	270	—	V/µs	—
30	Output slew rate 2	VT_f	—	Falling edge	—	330	—	V/µs	—
31	Dead time	T_D	—	—	—	0.45	—	µs	—
Thermal protection									
32	Thermal protection operating temperature	TSD_{on}	—	—	—	150	—	°C	—
33	Thermal protection hysteresis width	ΔTSD	—	—	—	40	—	°C	—
Low voltage protection									
34	Protection operating voltage	UVLO1	—	—	—	8.0	—	V	—
35	Protection release voltage	UVLO2	—	—	—	8.6	—	V	—

■ Test Circuit Diagram

1. Test Circuit Diagram1

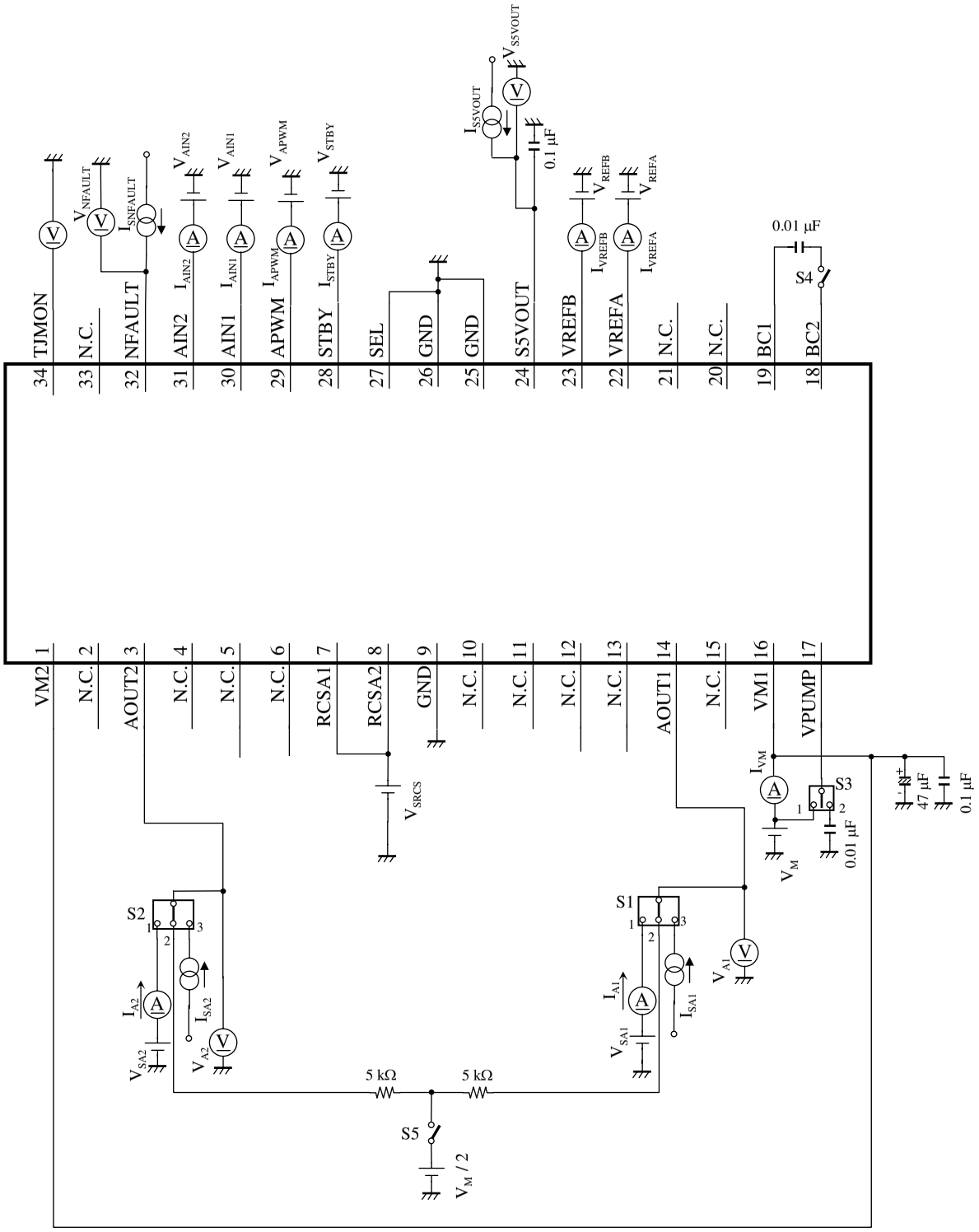

■ Test Circuit Diagram (continued)

2. Test Circuit Diagram2

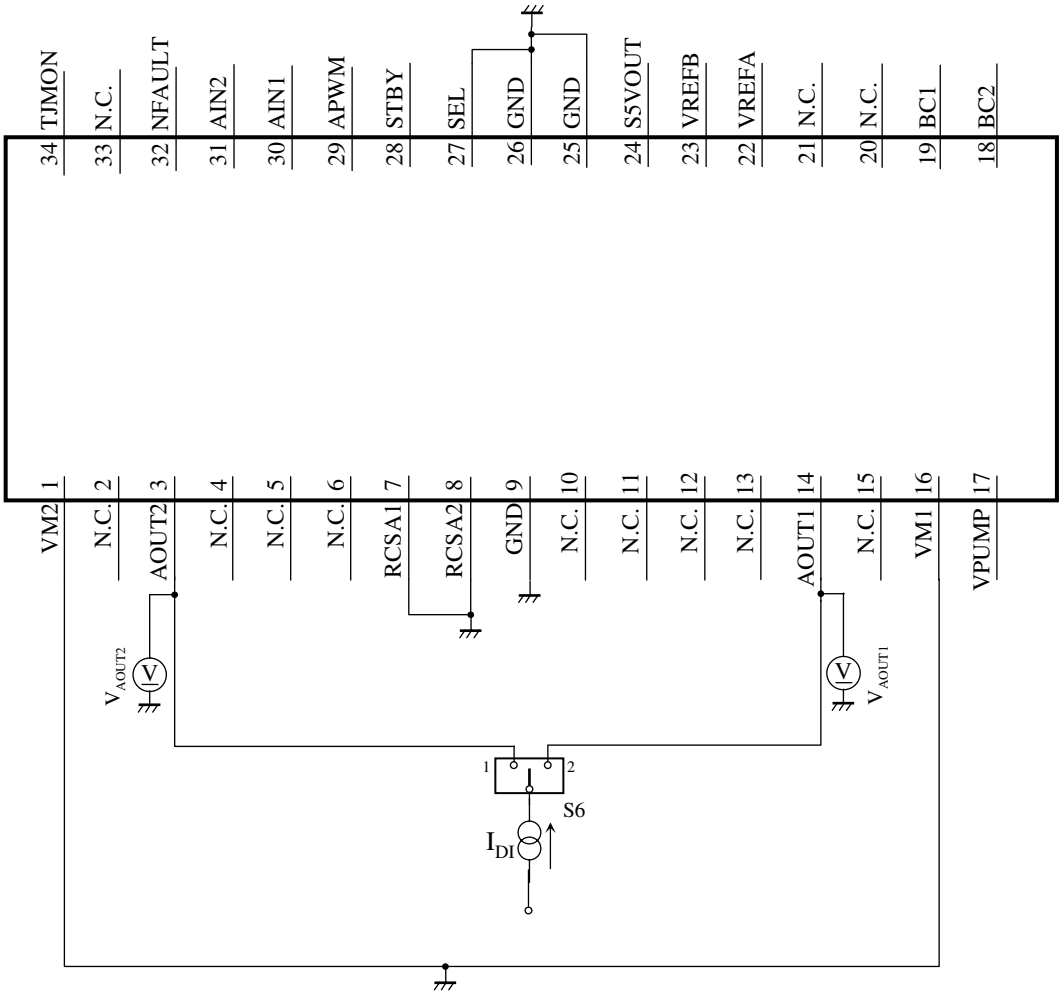

C No.	Measuring Pin	Relay Conditions	Voltage Conditions
		S6	I_{DI}
3	3	1	1 A
			–1 A
	14	2	1 A
			–1 A

■ Electrical Characteristics Test Procedures

1. Test Circuit 1

C No.	Measuring Pin	Relay Conditions				Voltage Conditions												
		S1 S2	S3	S4	S5	V_{STBY}	V_{APWM}	V_{AIN1}	V_{AIN2}	V_{REFA}	V_{REFB}	V_{SRCS}	V_{SA1} V_{SA2}	V_M	I_{SA1}	I_{SA2}	I_{NFAULT}	I_{S5VOUT}
1	3, 14	3	2	on	off	5 V	5 V	5 V	5 V	5 V	5 V	0 V	Hi-Z	24 V	–1.0 A	1.0 A	Hi-Z	Hi-Z
2		3	2	on	off	5 V	5 V	0 V	5 V	5 V	5 V	0 V	Hi-Z	24 V	1.0 A	–1.0 A	Hi-Z	Hi-Z
4	3, 14	1	1	off	off	5 V	0 V	5 V	5 V	5 V	5 V	0 V	37 V	37 V	Hi-Z	Hi-Z	Hi-Z	Hi-Z
		1	1	off	off	5 V	0 V	5 V	0 V	5 V	5 V	0 V	0 V	37 V	Hi-Z	Hi-Z	Hi-Z	Hi-Z
5	1, 16	3	2	on	off	0 V	5 V	5 V	0 V	5 V	5 V	0 V	Hi-Z	24 V	Hi-Z	Hi-Z	Hi-Z	Hi-Z
6	1, 16	3	2	on	off	5 V	5 V	5 V	0 V	5 V	5 V	0 V	Hi-Z	24 V	Hi-Z	Hi-Z	Hi-Z	Hi-Z
7	24	3	2	on	off	5 V	5 V	5 V	0 V	5 V	5 V	0 V	Hi-Z	24 V	Hi-Z	Hi-Z	Hi-Z	–2.5 mA
8	24	3	2	on	off	5 V	5 V	5 V	0 V	5 V	5 V	0 V	Hi-Z	24 V	Hi-Z	Hi-Z	Hi-Z	–5 mA
9 17	3, 14	2	2	on	off	5 V	2.1 V	2.1 V	2.1 V	5 V	5 V	0 V	Hi-Z	24 V	Hi-Z	Hi-Z	Hi-Z	Hi-Z
10 17	3, 14	2	2	on	off	5 V	2.1 V	0.6 V	2.1 V	5 V	5 V	0 V	Hi-Z	24 V	Hi-Z	Hi-Z	Hi-Z	Hi-Z
9 18	3, 14	2	2	on	off	5 V	0.6 V	0.6 V	2.1 V	5 V	5 V	0 V	Hi-Z	24 V	Hi-Z	Hi-Z	Hi-Z	Hi-Z
10 18	3, 14	2	2	on	off	5 V	0.6 V	0.6 V	0.6 V	5 V	5 V	0 V	Hi-Z	24 V	Hi-Z	Hi-Z	Hi-Z	Hi-Z
11 15 19	28, 29, 30, 31	3	2	on	off	5 V	5 V	5 V	5 V	5 V	5 V	0 V	Hi-Z	24 V	Hi-Z	Hi-Z	Hi-Z	Hi-Z
12 20	29, 30, 31	3	2	on	off	5 V	0 V	0 V	0 V	5 V	5 V	0 V	Hi-Z	24 V	Hi-Z	Hi-Z	Hi-Z	Hi-Z
13	3, 14	2	2	on	off	2.1 V	5 V	5 V	5 V	5 V	5 V	0 V	Hi-Z	24 V	Hi-Z	Hi-Z	Hi-Z	Hi-Z
14	3, 14	2	2	on	off	0.6 V	5 V	5 V	5 V	5 V	5 V	0 V	Hi-Z	24 V	Hi-Z	Hi-Z	Hi-Z	Hi-Z
16	28	3	2	on	off	0 V	0 V	0 V	0 V	5 V	5 V	0 V	Hi-Z	24 V	Hi-Z	Hi-Z	Hi-Z	Hi-Z
21	3	2	2	on	off	5 V	Pulse	5 V	5 V	5 V	5 V	0 V	Hi-Z	24 V	Hi-Z	Hi-Z	Hi-Z	Hi-Z
22	3	2	2	on	off	5 V	Pulse	5 V	5 V	5 V	5 V	0 V	Hi-Z	24 V	Hi-Z	Hi-Z	Hi-Z	Hi-Z
23	22, 23	3	2	on	off	5 V	5 V	5 V	5 V	5 V	5 V	0 V	Hi-Z	24 V	Hi-Z	Hi-Z	Hi-Z	Hi-Z
24	3	2	2	on	on	5 V	5 V	5 V	5 V	0 V	5 V	1 V	Hi-Z	24 V	Hi-Z	Hi-Z	Hi-Z	Hi-Z
25	3	2	2	on	on	5 V	5 V	5 V	5 V	0 V	5 V	1 V	Hi-Z	24 V	Hi-Z	Hi-Z	Hi-Z	Hi-Z
26	3	2	2	on	off	5 V	5 V	5 V	5 V	5 V	5 V	Sweep	Hi-Z	24 V	Hi-Z	Hi-Z	Hi-Z	Hi-Z
27	14	2	2	on	off	5 V	5 V	5 V	5 V	5.5 V	2.5 V	Sweep	Hi-Z	24 V	Hi-Z	Hi-Z	Hi-Z	Hi-Z
28	32	2	2	on	off	5 V	5 V	5 V	5 V	5 V	0 V	1 V	Hi-Z	24 V	Hi-Z	Hi-Z	1 mA	Hi-Z

■ Electrical Characteristics Test Procedures (continued)

1. Test Circuit 1 (continued)

8) Output impedance Z_{S5VOUT}

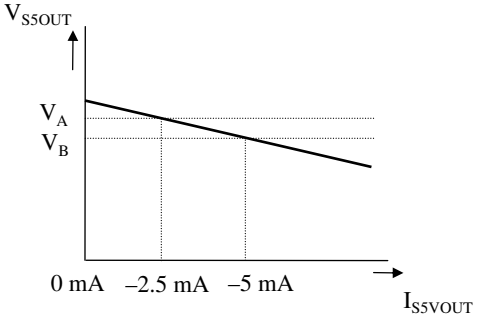

$$Z_{S5VOUT} = \frac{V_A - V_B}{2.5\ \text{mA}}$$

9) High-level IN input voltage V_{INH}

10) Low-level IN input voltage V_{INL}

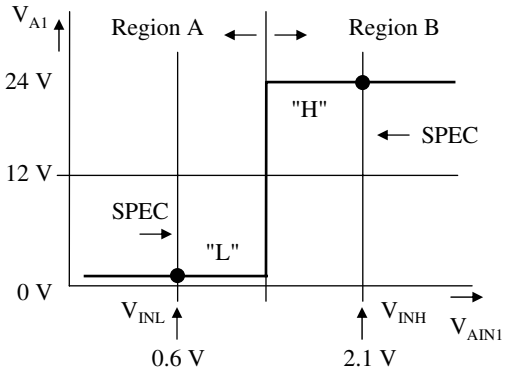

Check the conditions by measuring the AOUT1 voltage, AOUT2 voltage with the input voltage set to high level and low level respectively.

Region A : The Power transistor on the flow-in side turned on.
Another Power transistor on the flow-out side turned off.

Region B : The Power transistor on the flow-in side turned off.
Another Power transistor on the flow-out side turned on.

Measuring Pin	Voltage Conditions		Status
	V_{AIN1}	V_{AIN2}	
V_{AOUT1}	2.1 V	2.1 V	"H" output
	0.6 V	2.1 V	"L" output
V_{AOUT2}	2.1 V	2.1 V	"L" output
	0.6 V	2.1 V	"H" output

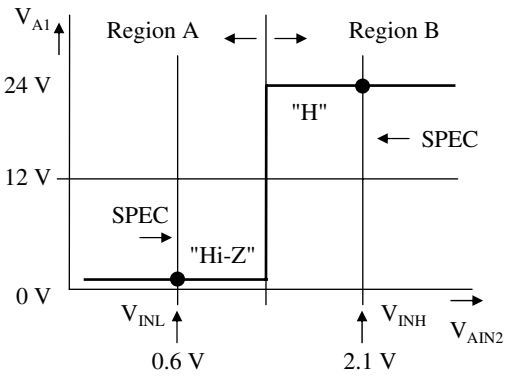

Check the conditions by measuring the AOUT1 voltage, AOUT2 voltage with the input voltage set to high level and low level respectively.

Region A : The Power transistor on the flow-in side turned off.
Another Power transistor on the flow-out side turned off.

Region B : The Power transistor on the flow-in side turned off.
Another Power transistor on the flow-out side turned on.

Measuring Pin	Voltage Conditions		Status
	V_{AIN1}	V_{AIN2}	
V_{AOUT1}	0.6 V	2.1 V	"H" output
	0.6 V	0.6 V	"Hi-Z" output
V_{AOUT2}	0.6 V	2.1 V	"H" output
	0.6 V	0.6 V	"Hi-Z" output

■ Electrical Characteristics Test Procedures (continued)

1. Test Circuit 1 (continued)

13) High-level STBY input voltage V_{STBYH}
14) Low-level STBY input voltage V_{STBYL}

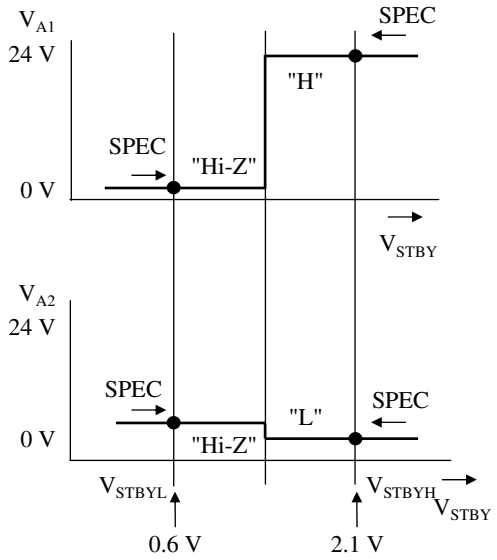

Check the conditions by measuring the AOUT1 voltage, AOUT2 voltage with the input voltage set to high level and low level respectively.

Measuring Pin	Voltage Conditions V_{STBY}	Status
V_{AOUT1}	0.6 V	"Hi-Z" output
V_{AOUT2}	0.6 V	"Hi-Z" output
V_{AOUT1}	2.1 V	"H" output
V_{AOUT2}	2.1 V	"L" output

17) High-level PWM input voltage V_{PWMH}
18) Low-level PWM input voltage V_{PWML}

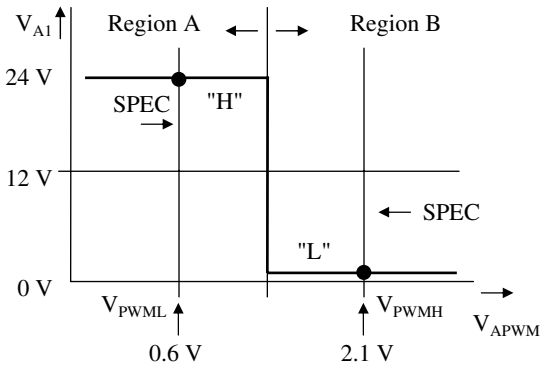

Check the conditions by measuring the AOUT1 voltage with the input voltage set to high level and low level respectively.

Measuring Pin	Voltage Conditions V_{APWM}	Status
V_{AOUT1}	0.6 V	"H" output
	2.1 V	"L" output

Region A : The Power transistor on the flow-in side turned off.
Another Power transistor on the flow-out side turned on.

Region B : The Power transistor on the flow-in side turned on.
Another Power transistor on the flow-out side turned off.

■ Electrical Characteristics Test Procedures (continued)

1. Test Circuit 1 (continued)

21) PWM Input Max frequency f_{PWM}

22) Input Min pulse width t_W

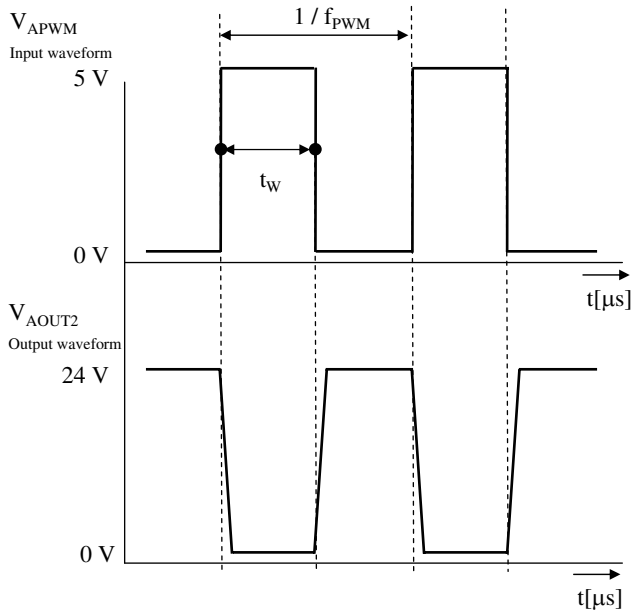

V_{APWM} = Pulse

Check the conditions by measuring the AOUT2 voltage waveform.

PWM Input Pulse

	Pulse Conditions	Input waveform
	V_{APWM}	
Frequency	200 kHz	Square-wave pulse
Duty	40%	
Amplitude	5 V[p-p]	
Offset	2.5 V	

PWM Input Max Frequency f_{PWM}

Check the conditions by measuring the cycle time of output voltage pulses.

Input Min pulse width t_W

Check the conditions by measuring the Duty of output voltage pulses.

24) PWM frequency 1 f_{PWM}

25) Pulse blanking time T_B

The value is obtained from V_{A2} voltage at V_{REFA} = 0 V, V_{REFB} = 5 V, AIN1 = 5 V.

The V_{A2} output waveform is shown below.

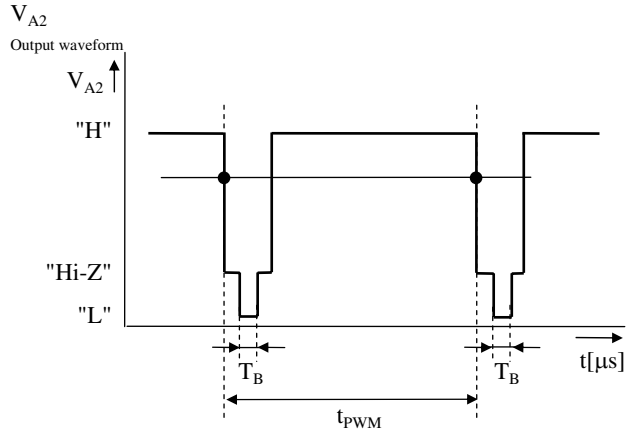

PWM Frequency f_{PWM}

Measure the cycle time of output voltage pulses and obtain the value from the following formula.

$$f_{PWM} = \frac{1}{t_{PWM}}$$

Pulse blanking time T_B

Measure the time of V_{A2} output voltage low level.

■ Electrical Characteristics Test Procedures (continued)

1. Test Circuit 1 (continued)

26) Comp threshold 1 VT_{H1}

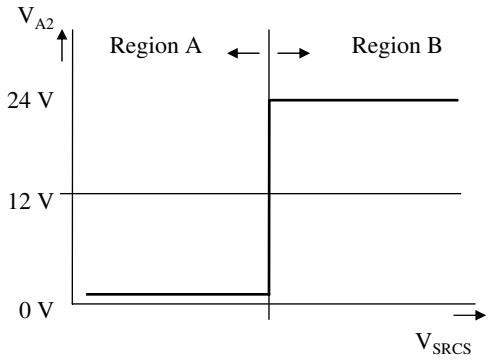

Make RCS voltage sweep
and measure threshold voltage of output pins.

Region A : Always output "L"
Region B : Min. duty, output "L"

27) Comp threshold 2 VT_{H2}

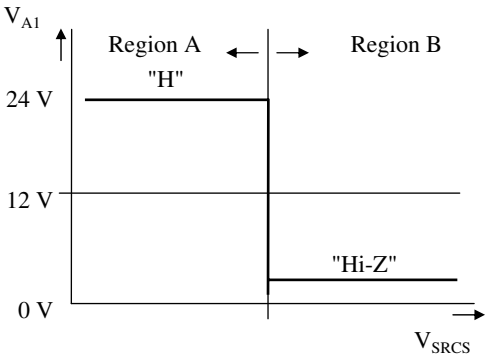

Make RCS voltage sweep
and measure threshold voltage of output pins.

Region A : Always output "H"
Region B : Output "Hi-Z"

■ Electrical Characteristics Test Procedures (continued)

1. Test Circuit 1 (continued)
   1) High-level output saturation voltage V_{OH}
   2) Low-level output saturation voltage V_{OL}

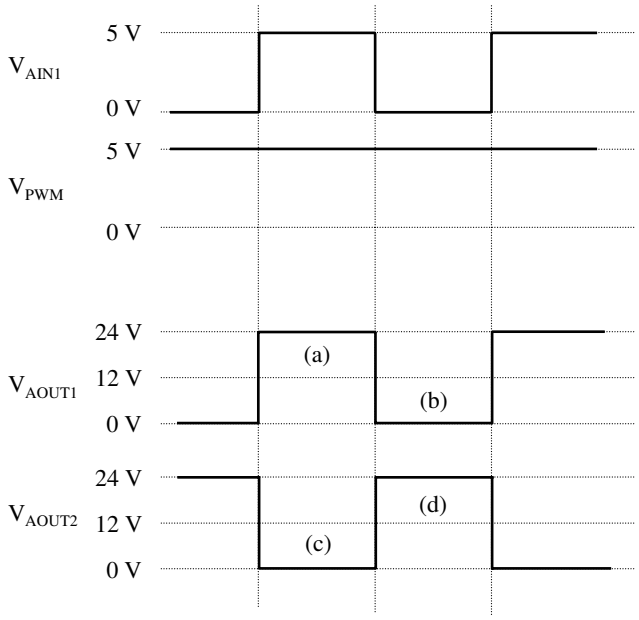

C No.	Measuring Pin	Current Conditions	Status
		I_{SA1}, I_{SA2}	
1	AOUT1 / AOUT2	–1.0 A	Measure each voltage of the AOUT1 and AOUT2 at (a) , (d) above
2	AOUT1 / AOUT2	1.0 A	Measure each voltage of the AOUT1 and AOUT2 at (c) , (b) above

2. Test Circuit 2
   3) Flywheel diode forward voltage V_{DI}

C No.	Measuring Pin	Relay Conditions
		S6
3	AOUT1 / AOUT2	Measure the diode voltage at each level on contacts1, 2 of S6.

■ Technical Data

• Circuit diagrams of the input/output part and pin function descriptions

Note) The characteristics listed below are reference values based on the IC design and are not guaranteed.

Pin No.	Waveform and voltage	Inner circuit	Impedance	Description
3 7 8 14	—	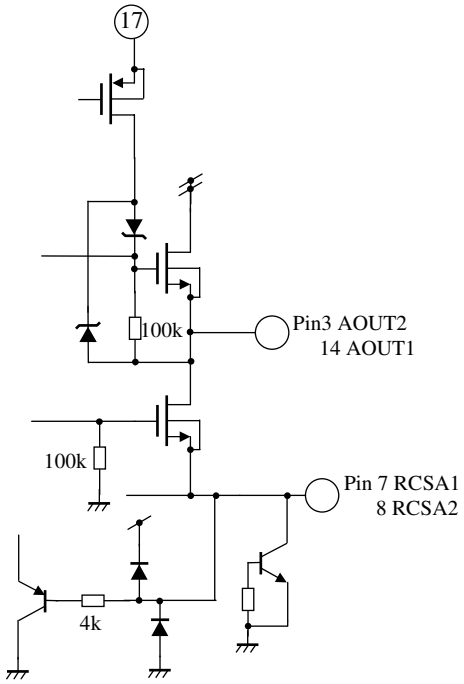	—	Pin 7 : Current detection 1 8 : Current detection 2 3 : Motor drive output 2 14 : Motor drive output 1
17 18	—	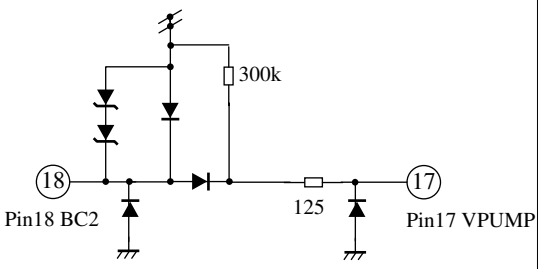	—	Pin 18 : Charge Pump capacitor 2 17 : Charge Pump circuit output

■ Technical Data (continued)

• Circuit diagrams of the input/output part and pin function descriptions (continued)

Note) The characteristics listed below are reference values based on the IC design and are not guaranteed.

Pin No.	Waveform and voltage	Inner circuit	Impedance	Description
19	—	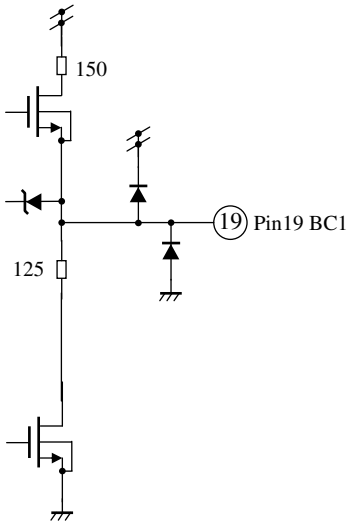	—	Pin 19 : Charge Pump capacitor 1
22	—	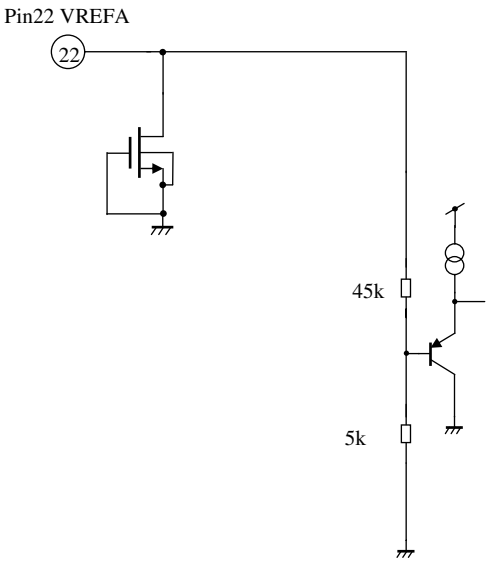	50 kΩ	Pin 22 : Peak current setting input

■ Technical Data (continued)

• Circuit diagrams of the input/output part and pin function descriptions (continued)

Note) The characteristics listed below are reference values based on the IC design and are not guaranteed.

Pin No.	Waveform and voltage	Inner circuit	Impedance	Description
23	—	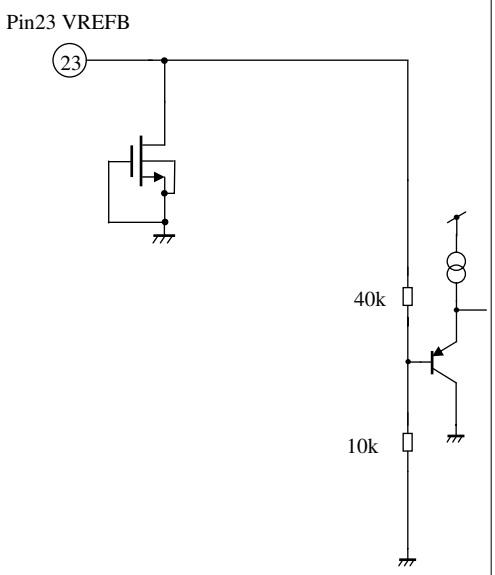	50 kΩ	Pin 23 : Load short threshold input
24	—	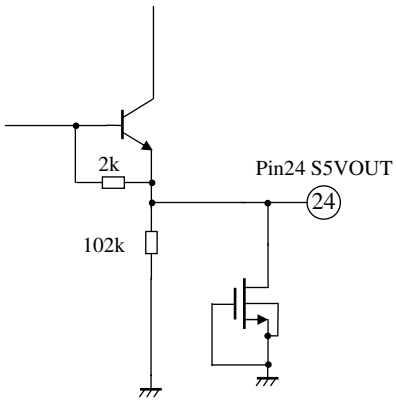	—	Pin 24 : Internal reference voltage (5 V output)

■ Technical Data (continued)

• Circuit diagrams of the input/output part and pin function descriptions (continued)

Note) The characteristics listed below are reference values based on the IC design and are not guaranteed.

Pin No.	Waveform and voltage	Inner circuit	Impedance	Description
28	—	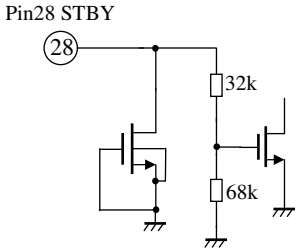	100 kΩ	Pin 28 : Standby input
27 29	—	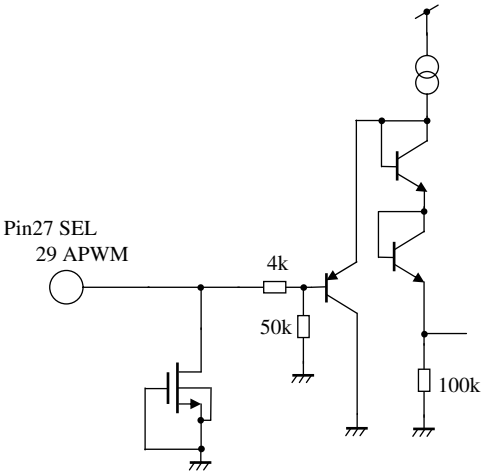	54 kΩ	Pin 27 : Test mode input 29 : PWM input

■ Technical Data (continued)

• Circuit diagrams of the input/output part and pin function descriptions (continued)

Note) The characteristics listed below are reference values based on the IC design and are not guaranteed.

Pin No.	Waveform and voltage	Inner circuit	Impedance	Description
30 31	—	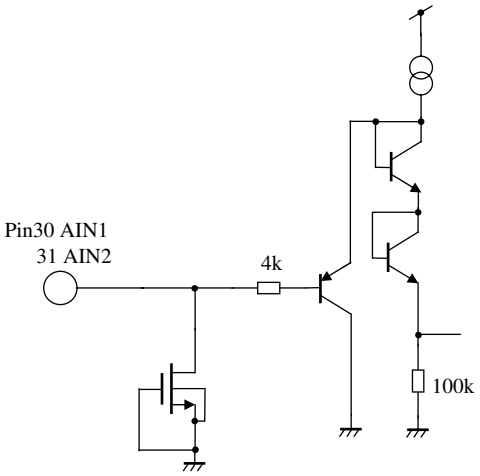	—	Pin 30 : Forward / Reverse input 31 : Brake mode input
32	—	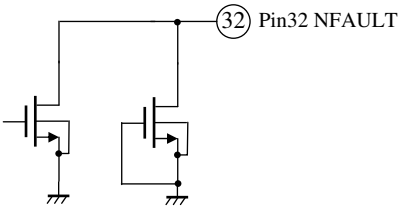	—	Pin 32 : Abnormal detection output

■ Technical Data (continued)

• Circuit diagrams of the input/output part and pin function descriptions (continued)

Note) The characteristics listed below are reference values based on the IC design and are not guaranteed.

Pin No.	Waveform and voltage	Inner circuit	Impedance	Description
34	—	Pin34 TJMON 34 0.8k	—	Pin 34 : VBE monitor
Symbols	—	S5VOUT (Pin 24) VM (Pin 1, Pin 16) Diode Zener diode Ground	—	—