Chipsmall Limited consists of a professional team with an average of over 10 year of expertise in the distribution of electronic components. Based in Hongkong, we have already established firm and mutual-benefit business relationships with customers from,Europe,America and south Asia,supplying obsolete and hard-to-find components to meet their specific needs.

With the principle of “Quality Parts,Customers Priority,Honest Operation,and Considerate Service”,our business mainly focus on the distribution of electronic components. Line cards we deal with include Microchip,ALPS,ROHM,Xilinx,Pulse,ON,Everlight and Freescale. Main products comprise IC,Modules,Potentiometer,IC Socket,Relay,Connector.Our parts cover such applications as commercial,industrial, and automotives areas.

We are looking forward to setting up business relationship with you and hope to provide you with the best service and solution. Let us make a better world for our industry!

Contact us

Tel: +86-755-8981 8866 Fax: +86-755-8427 6832
Email & Skype: info@chipsmall.com Web: www.chipsmall.com
Address: A1208, Overseas Decoration Building, #122 Zhenhua RD., Futian, Shenzhen, China

SPECIFICATIONS		
PARAMETERS	VALUES	UNITS
RATED INPUT POWER	0.2	W
MAX INPUT POWER	0.4	W
IMPEDANCE	8 ± 15%	OHM
OUTPUT SPL @ 0.1W/0.1M (AT 0.8, 1.0, 1.2, 1.5 kHz)	90 ± 3	dBA
DISTORTION (MAX.)	5%	-
RESONANT FREQUENCY	530 ± 20%	Hz
FREQUENCY RANGE	530 ~ 8,000	Hz
HOUSING MATERIAL	METAL	-
CONE MATERIAL	PAPER	-
MAGNET MATERIAL	Nd-Fe-B	-
OPERATING TEMPERATURE	-20 ~ +60	°C
WEIGHT	31	grams

THIS DOCUMENT CONTAINS DATA PROPRIETARY TO PROJECTS UNLIMITED, INC. ANY USE OR REPRODUCTION, IN ANY FORM, WITHOUT PRIOR WRITTEN PERMISSION OF PROJECTS UNLIMITED, INC. IS PROHIBITED.
©2003, Projects Unlimited Inc.

REVISION HISTORY			
LTR	DESCRIPTION	DATE	APPROVED
-	RELEASED FROM ENGINEERING	10/11/2006	
A	REVISED TO INVENTOR 3-D DRAWING TEMPLATE	12/29/2007	B.R.

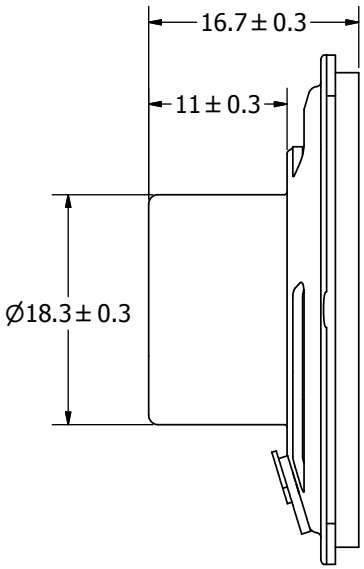

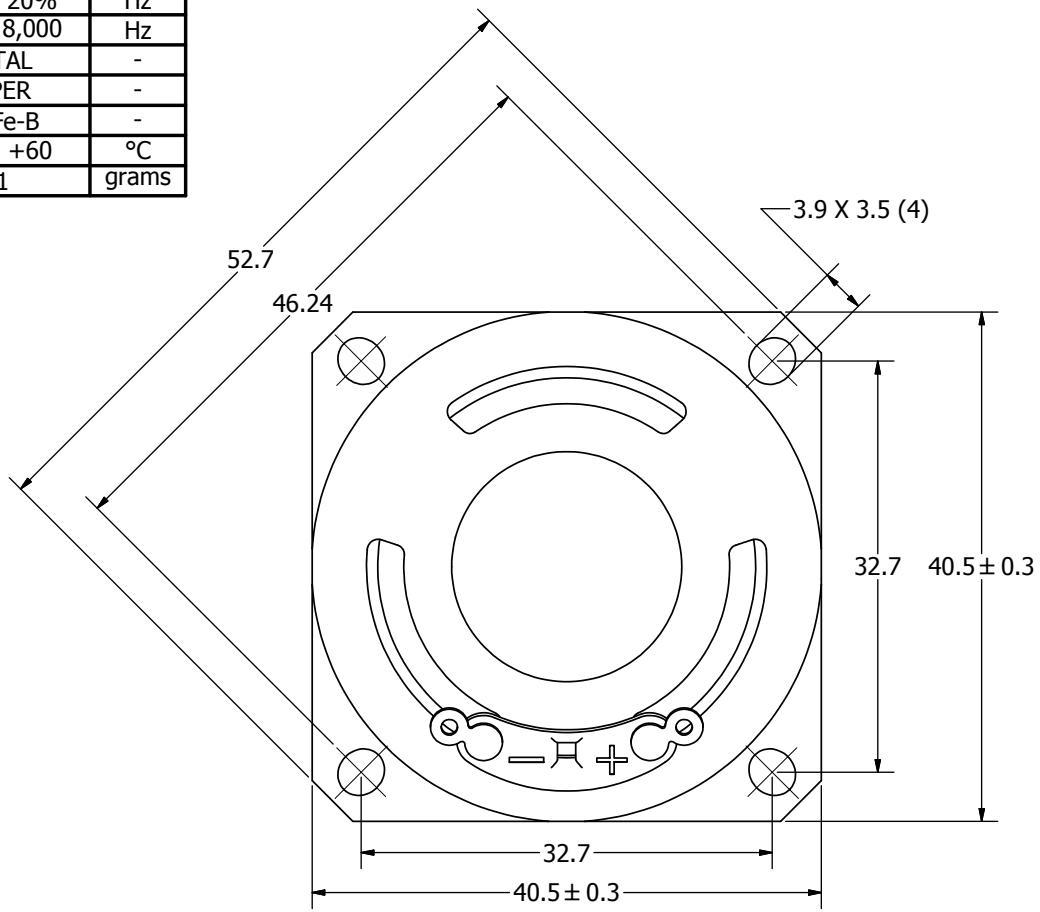

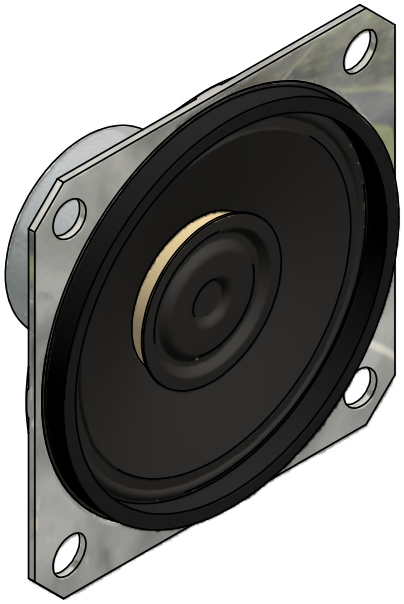

NOTES:

1. ALL DIMENSIONS ARE IN MILLIMETERS.
2. SPECIFICATIONS SUBJECT TO CHANGE OR WITHDRAWL WITHOUT NOTICE.
3. THIS PART IS RoHS 2002/95/EC COMPLIANT.

UNLESS OTHERWISE SPECIFIED: DIMENSIONS ARE IN MILLIMETERS, TOLERANCES ARE ±0.5 AND ANGLES ARE ±3°.	SIZE A3	Designed by	Date	Checked by	Date	Approved by	Date	Drawn Date
		J.D.	10/11/2006	B.R.	10/11/2006	R.W.	10/11/2006	12/29/2008
AS04008PS-2-R.idw		pui audio A Division of Projects Unlimited		AS04008PS-2-R				
				Speaker			Edition -	Sheet 1 / 1