Chipsmall Limited consists of a professional team with an average of over 10 year of expertise in the distribution of electronic components. Based in Hongkong, we have already established firm and mutual-benefit business relationships with customers from,Europe,America and south Asia,supplying obsolete and hard-to-find components to meet their specific needs.

With the principle of “Quality Parts,Customers Priority,Honest Operation,and Considerate Service”,our business mainly focus on the distribution of electronic components. Line cards we deal with include Microchip,ALPS,ROHM,Xilinx,Pulse,ON,Everlight and Freescale. Main products comprise IC,Modules,Potentiometer,IC Socket,Relay,Connector.Our parts cover such applications as commercial,industrial, and automotives areas.

We are looking forward to setting up business relationship with you and hope to provide you with the best service and solution. Let us make a better world for our industry!

Contact us

Tel: +86-755-8981 8866 Fax: +86-755-8427 6832
Email & Skype: info@chipsmall.com Web: www.chipsmall.com
Address: A1208, Overseas Decoration Building, #122 Zhenhua RD., Futian, Shenzhen, China

Demo Kit Manual

AS3955

Standard Board

AS3955-WL_DK_ST

Content Guide

1 General Description 3
1.1 Kit Content 3
1.2 Compatibility 4
2 Hardware Description 4
2.1 Controller Board Description 4
2.1.1 Controller Board Layout and Schematics 4
2.1.2 Bill of Materials 7
2.2 Tag Description 8
2.2.1 Tag Layout 8
2.2.1.1 20x25 mm tag 8
2.2.1.2 22x38 mm tag 8
2.2.1.3 32x45 mm tag 8
3 Software Description 9
4 Configure and Use Example 14
4.1 AS3955 with AS3911 14
4.1.1 NFC T2T 14
4.1.2 NFC T4T 14
4.1.2.1 Powered from USB port 14
4.1.2.2 Powered from AS3955 (energy harvesting) 15
4.2 AS3955 with NFC Enabled Android Smartphone 15
4.2.1 NFC T2T 15
4.2.2 NFC T4T 16
4.2.2.1 Powered from USB port 16
4.2.2.2 Powered from AS3955 (energy harvesting) 16
5 Ordering & Contact Information 17
6 Copyrights & Disclaimer 18
7 Revision Information 19

1 General Description

This application note describes the AS3955 General Purpose Demo Kit and its usage. The purpose of the demonstrator is to show all the features and functionalities of the AS3955. The demonstration works in combination with a reader (AS3911 GP demonstrator) and/or NFC enabled smartphone. The main features of the demonstrator are:

- Demonstration of a Tag 4 Type (T4T) operation
- Demonstration of a Tag 2 Type (T2T) operation

The Evaluation Kit allows you to supply all components by the PC USB Port. No external supply or battery is needed. Except the USB cable (included), no wiring is needed. This allows a fast and comfortable evaluation of the AS3955.

1.1 Kit Content

The AS3955 Demo Kit includes the following items:

- AS3955 tags (3 pcs.)
- Controller Board with USB interface
- USB Cable
- USB Data Stick

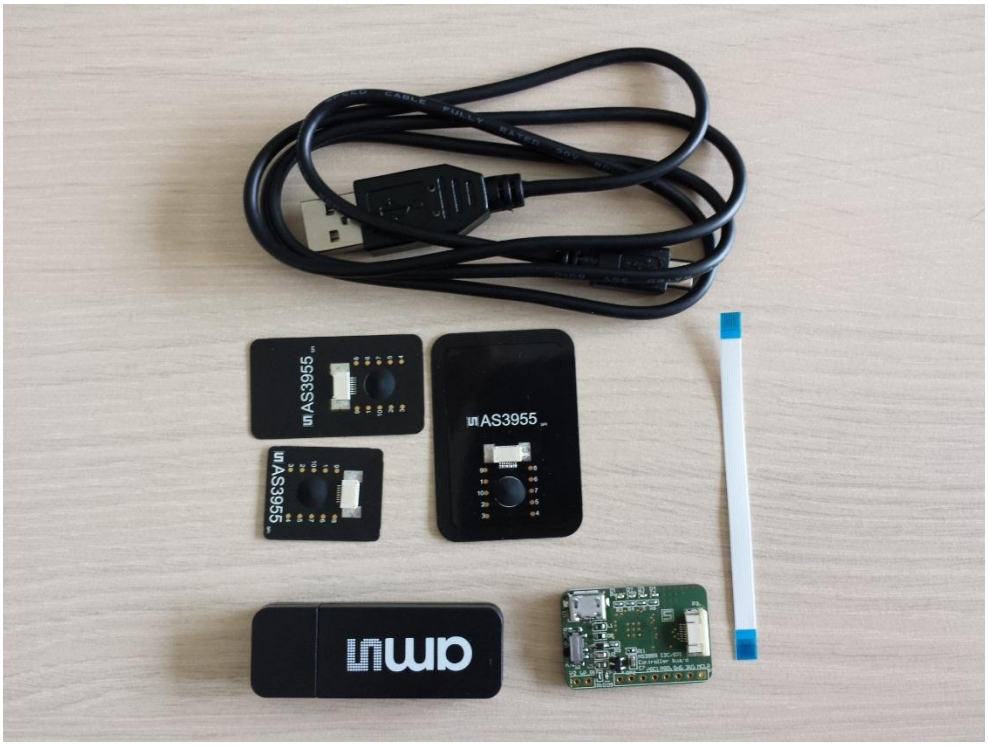

Figure 1: Demo Kit content

1.2 Compatibility

This demo works with

- AS3955 GP GUI version 1.0.10.0 or higher and FW 1.0.9 or higher
- AS3911 GP GUI version 3.1.2.0 or higher and FW version 3.1.0 or higher

2 Hardware Description

The AS3955 demo kit is composed of the tags and the controller board. The tag consists of the AS3955, antenna and a connector. The tag (unpowered) works like a standard NFC-Forum T2T.

Connector provides all connections required for the microcontroller:

- VSS
- SPI/I2C
- /IRQ
- VPREG

2.1 Controller Board Description

The controller board mainly consists of the USB connector, PIC24FJ128GB202 microcontroller and an 8MHz crystal. The board is powered by USB or by RF field energy extracted by AS3955.

2.1.1 Controller Board Layout and Schematics

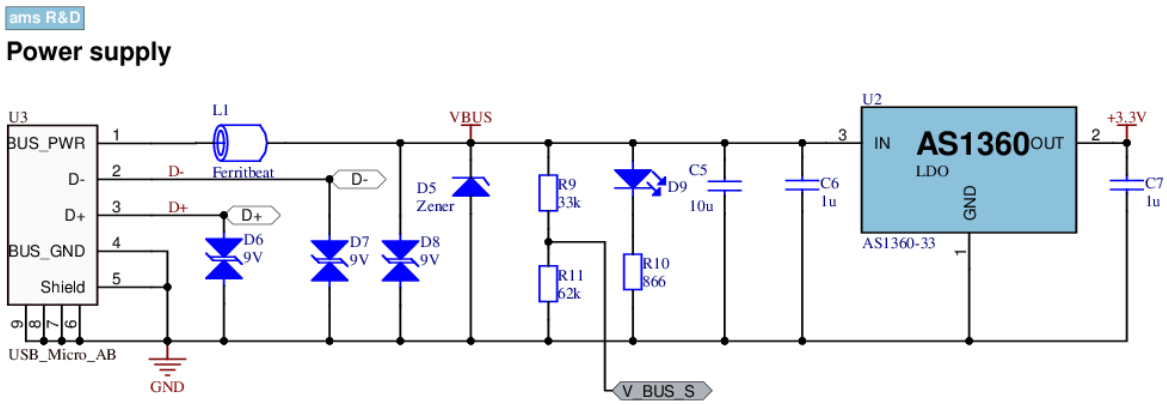

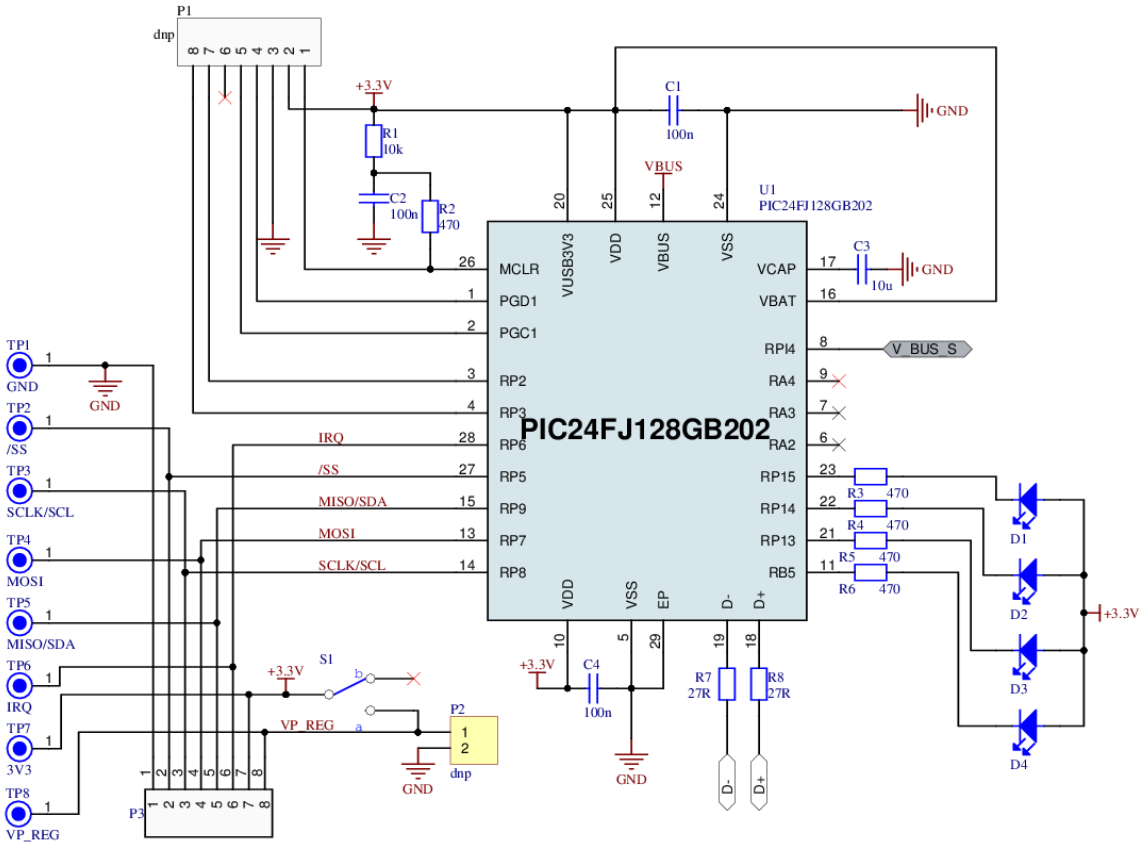

3D View | Top Layer | Bottom Layer

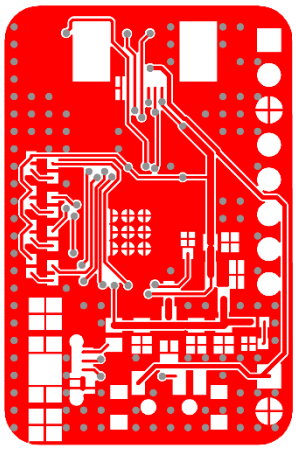

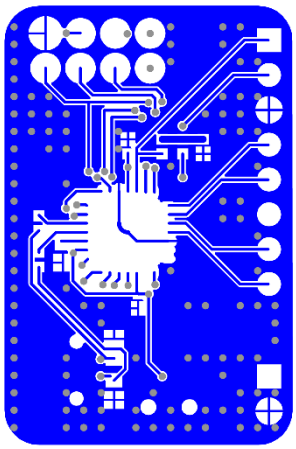

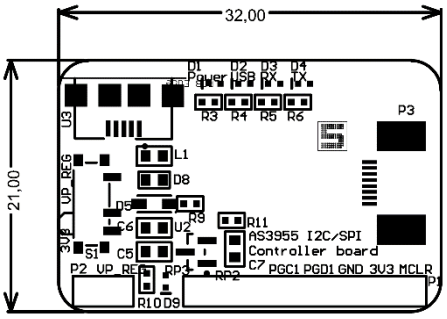
32,00
21,00
D1 D2 D3 D4
Power USB RX TX
R3 R4 R5 R6
P3
U3
L1
D8
D5
R9
C6
U2
R11
AS3955 I2C/SPI
Controller board
C7 PGC1 PGD1 GND 3V3 MCLR
C5
S1
P2 VP_REG
RP3
RP2
R10 D9
P1

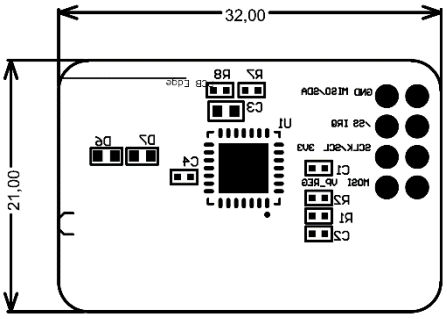
32,00
21,00
R8
R7
C3
U1
D6
D7
C4
C1
R2
R1
C2

2.1.2 Bill of Materials

Bill of Materials

Company: ams AG
Application Engineer: dstr
Product Number: AS3955
ARS Project Name: AS3955 Demo Kit
Boardtype & Version: Controllerboard V4.0
Release Date: 27/1/2015
Revision: Rev 4.0.0

#	Designator	Comment	Manufacturer	Manufacturer Part Number	Quantity
	C1, C2, C4	100n	MULTICOMP	MC0402X104K160CT	3
	C3, C5	10u	TDK	C1608X5R1A106K080AC	2
	C6, C7	1u	KEMET	C0603C105K9RACTU	2
	D1, D2, D3, D4, D9	LED_LUMEX	KINGBRIGHT	KPHHS-1005QBC-D-V	5
	D5	Zener	ON SEMICONDUCTOR	MM3Z6V8T1G	1
	D6, D7, D8	9V	EPCOS	CDS3C09GTA.	3
	L1	Ferritbeat	MURATA	BLM18EG471SN1D	1
	Logo1				1
	P3	89212_Connector	TE CONNECTIVIY / AMP	1734592-8	1
	R1	10k	TE CONNECTIVITY	CRG0402J10K	1
	R10	866	MULTICOMP	MCMR04X8660FTL	1
	R11	62k	MULTICOMP	MCSR04X6202FTL	1
	R2, R3, R4, R5, R6	470	MULTICOMP	MCMR04X4700FTL	5
	R7, R8	27R	YAGEO (PHYCOMP)	RC0402FR-0727RL	2
	R9	33k	MULTICOMP	MCMR04X3302FTL	1
	S1	SW_DPST1_THMD	C & K COMPONENTS	PCM12SMTR	1
	U1	PIC24FJ128GB202	MICROCHIP	PIC24FJ128GB202-I/MM	1
	U2	AS1360-33	ams	AS1360-33-T	1
	U3	USB_Micro_AB	Hirose Electric Co Ltd	ZX62-AB-5PA(11)	1

34

2.2 Tag Description

Tag is consists of AS3955 IC, Coil antenna and a FCC connector.

2.2.1 Tag Layout

2.2.1.1 20x25 mm tag

3D View | Top Layer | Bottom Layer

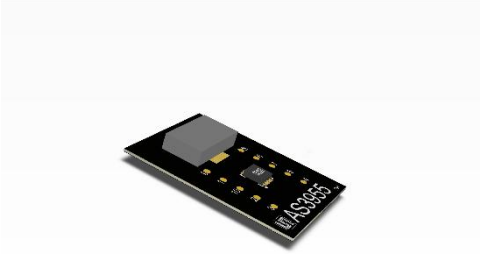

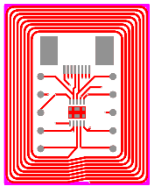

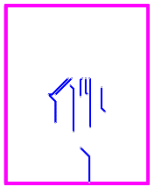

3D View | Top Layer | Bottom Layer

2.2.1.2 22x38 mm tag

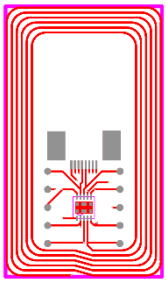

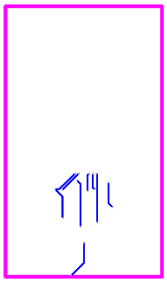

3D View | Top Layer | Bottom Layer

2.2.1.3 32x45 mm tag

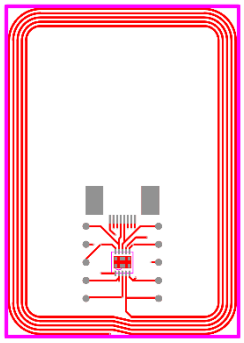

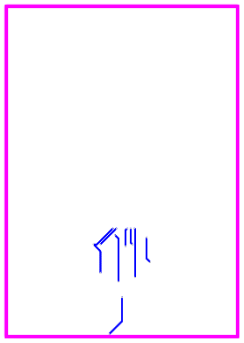

3 Software Description

The AS3955 IC natively behaves like a T2T with NDEF message. It can be used with the AS3911 GP board (Reader) or a standard NFC enabled phone. The software enables to change setup the AS3955 to operate as a T4T, enable energy harvesting and other advanced features.

The SW can be downloaded from the following destinations:

	Software	FTP site	User	Password
AS3911GP_GUI	General Purpose Demo GUI	http://www.space4ams.at/user/AS3911GP_GUI/default.php	GPgui	hgewdt3
AS3955 GUI	General purpose	http://www.space4ams.at/user/AS3955_GUI/default.php	as3955_gui	rgh$34

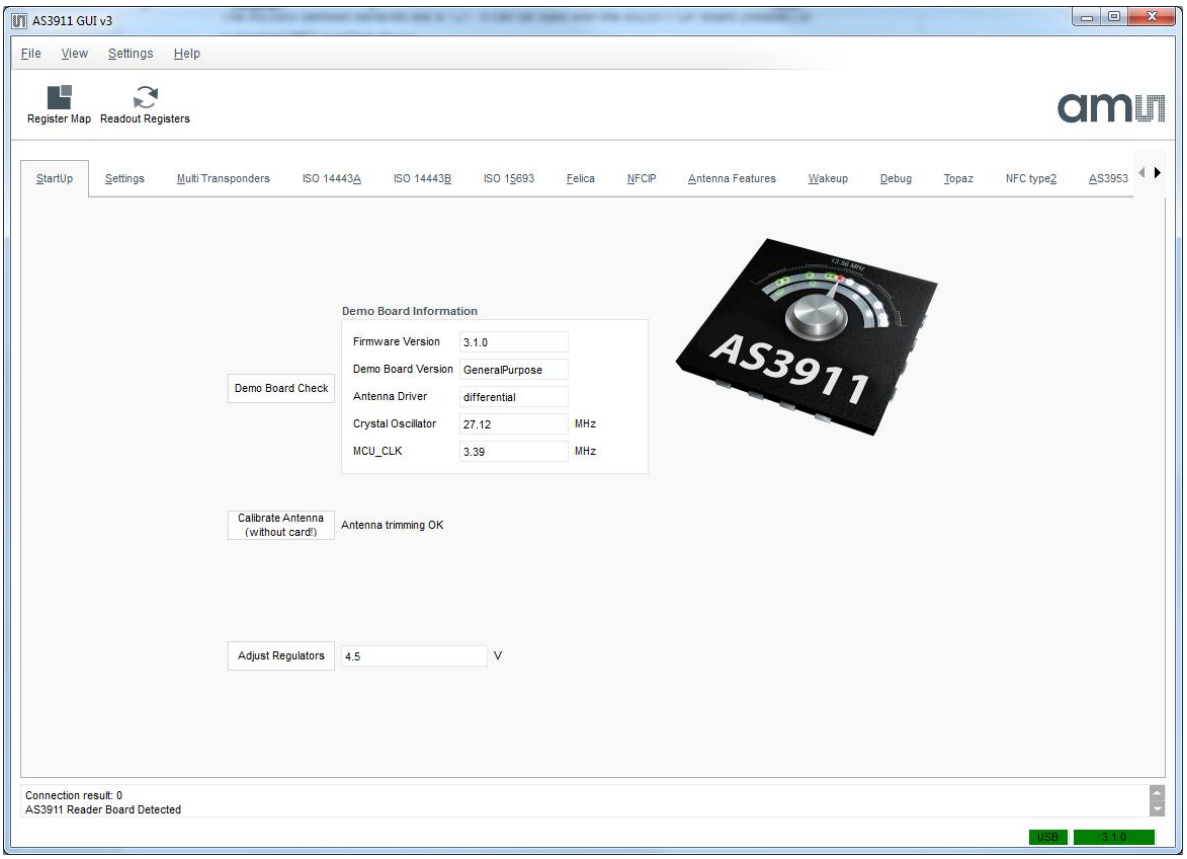

Figure 2: AS3911 GUI

Figure 3: AS3911 GUI Version

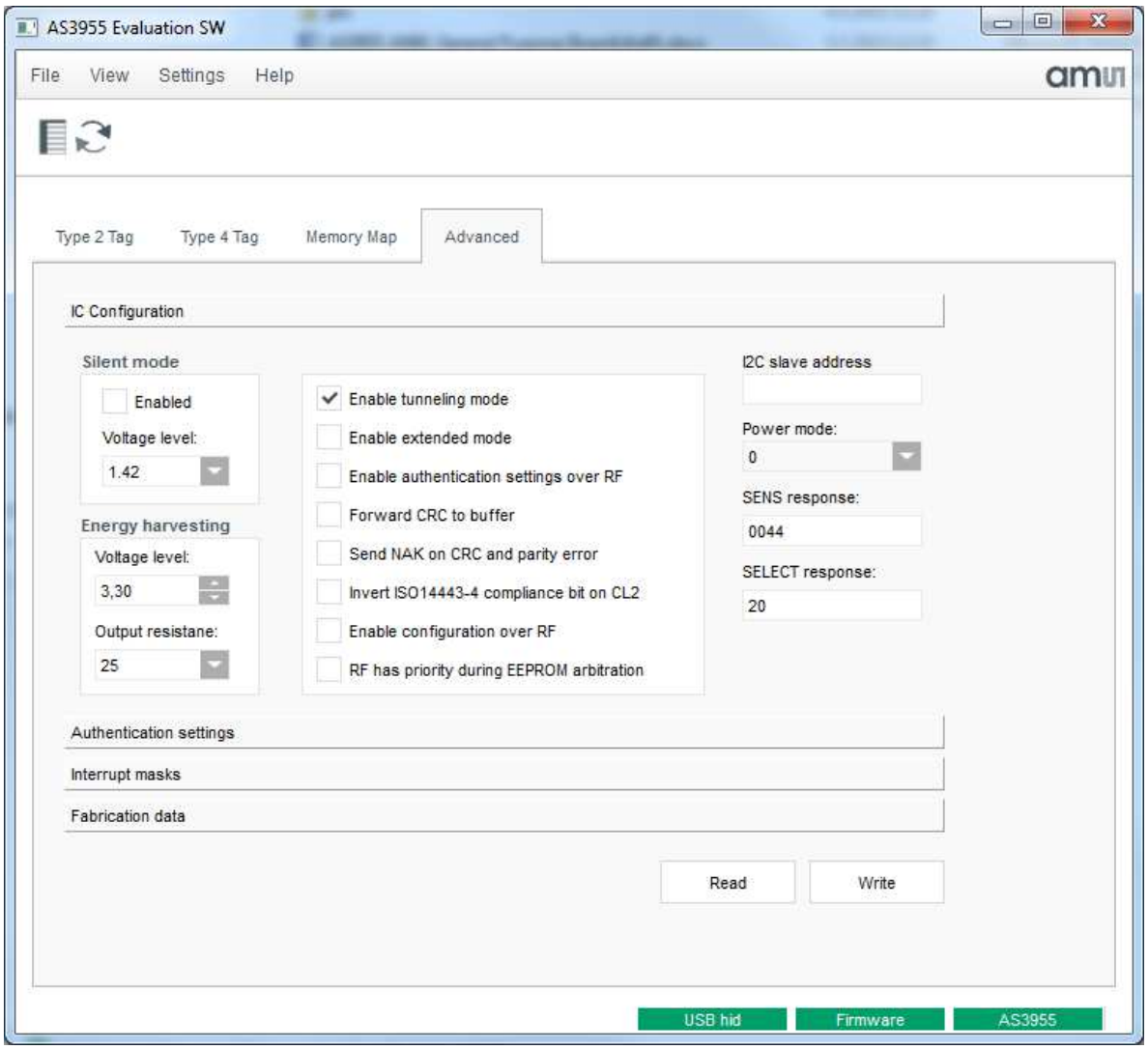

Figure 4: AS3955 GUI

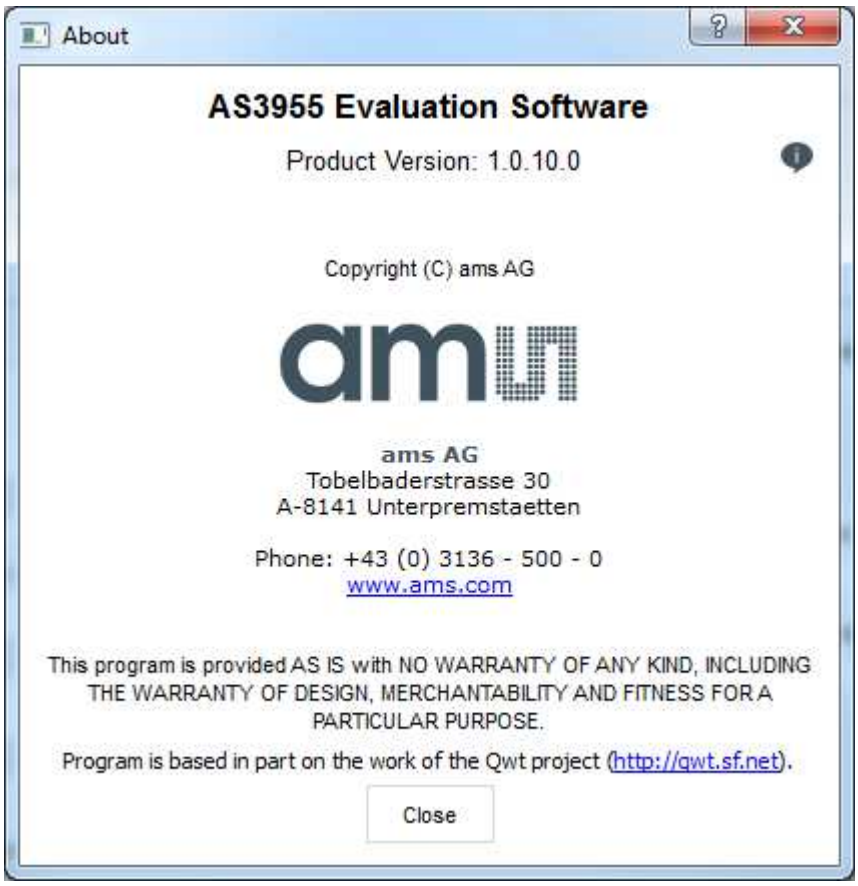

Figure 5: AS3955 GUI Version

4 Configure and Use Example

4.1 AS3955 with AS3911

4.1.1 NFC T2T

- Connect the AS3955 Controller board to the computer with USB cable and start the *AS3955 Evaluation Software*.
- Click on the *Type 2 Tag* tab.
- Click on *Configure as Type 2 Tag*. The AS3955 is now configured as T2T.
- Connect the AS3911 GP demo to the computer with USB cable and start the *AS3911 GUI v3*.
- In AS3911 GUI click on "*Demo Board Check*", "*Adjust Regulator*" and "*Calibrate Antenna*" to configure the board.
- Press Alt+2 to bring up the *NFC type2* tab.
- Place the .AS3955 tag on the AS3911
- Click *Configuration*
- Next click *WUPA -> Active*. In the *UID* you will see the UID of the tag and on the right off the text box it will say *Tag Type 2 compliant*.
- Next click *Execute*. With this command you will read the content of the EEPROM memory in the tag.

4.1.2 NFC T4T

4.1.2.1 Powered from USB port

- Connect the AS3955 Controller board to the computer with USB cable and start the *AS3955 Evaluation Software*.
- Click on the *Type 4 Tag* tab.
- Click on *Configure as Type 4 Tag*. The AS3955 is now configured as T4T.
- Connect the AS3911 GP demo to the computer with USB cable and start the *AS3911 GUI v3*.
- In AS3911 GUI click on "*Demo Board Check*", "*Adjust Regulator*" and "*Calibrate Antenna*" to configure the board.
- Press Alt+A to bring up the *ISO 14443A* tab.
- Click *Configuration*. This will configure the AS911 for ISO 14443A operations.
- Place the .AS3955 tag on the AS3911
- Click *REQA -> Active*. In the *UID* you will see the UID of the tag and on the right off the text box it will say *UID complete, Transponder compliant with ISO/IEC 14443-4*
- Click *RATS*.
- Click *PPS*.
- Click *DESELECT*.

4.1.2.2 Powered from AS3955 (energy harvesting)

- Connect the AS3955 Controller board to the computer with USB cable and start the *AS3955 Evaluation Software*.
- Click on the *Type 4 Tag* tab.
- Click on *Configure as Type 4 Tag*. The AS3955 is now configured as T4T.
- Click on the *Advanced* tab.
- Click on the *IC Configuration*.
- Click the *Read* button. To read the current settings of AS3955.
- In the *Energy harvesting* box click up arrow until the *Voltage level>* is set to *3,30*. To set the regulated output voltage value.
- With the drop-down menu set the *Output resistance:* to *25*. To set the output resistance of voltage regulator.
- Click *Write*. To write the settings to AS3955.
- Disconnect the USB cable from the controller board and move the switch on controller board to position *VP_REG.*
- Connect the AS3911 GP demo to the computer with USB cable and start the *AS3911 GUI v3*.
- In AS3911 GUI click on "*Demo Board Check*", "*Adjust Regulator*" and "*Calibrate Antenna*" to configure the board.
- Press Alt+A to bring up the *ISO 14443A* tab.
- Click *Configuration*. This will configure the AS911 for ISO 14443A operations.
- Place the .AS3955 tag on the AS3911
- Click *REQA -> Active*. In the *UID* you will see the UID of the tag and on the right off the text box it will say *UID complete, Transponder compliant with ISO/IEC 14443-4*
- Click *RATS*.
- Click *PPS*.
- Click *DESELECT*.

4.2 AS3955 with NFC Enabled Android Smartphone[1]

4.2.1 NFC T2T

- Connect the AS3955 Controller board to the computer with USB cable and start the *AS3955 Evaluation Software*.
- Click on the *Type 2 Tag* tab.
- Click on *Configure as Type 2 Tag*. The AS3955 is now configured as T2T.
- Dissconnect the USB cable.
- Place the tag on the back of the smartphone. Smartphone will detect the tag and take appropriate action.[2]

[1] For this application note Samsung Galaxy S4 was used. Android version 5.0.2
[2] NFC must be enabled

4.2.2 NFC T4T

4.2.2.1 Powered from USB port

- Connect the AS3955 Controller board to the computer with USB cable and start the *AS3955 Evaluation Software*.
- Click on the *Type 4 Tag* tab.
- Click on *Configure as Type 4 Tag*. The AS3955 is now configured as T4T.
- Place the tag on the back of the smartphone. Smartphone will detect the tag and take appropriate action. [3]

4.2.2.2 Powered from AS3955 (energy harvesting)

Connect the AS3955 Controller board to the computer with USB cable and start the *AS3955 Evaluation Software*.

- Click on the *Type 4 Tag* tab.
- Click on *Configure as Type 4 Tag*. The AS3955 is now configured as T4T.
- Click on the *Advanced* tab.
- Click on the *IC Configuration*.
- Click the *Read* button. To read the current settings of AS3955.
- In the *Energy harvesting* box click up arrow until the *Voltage level>* is set to *3,30*. To set the regulated output voltage value.
- With the drop-down menu set the *Output resistance:* to *25*. To set the output resistance of voltage regulator.
- Click *Write*. To write the settings to AS3955.
- Disconnect the USB cable from the controller board and move the switch on controller board to position *VP_REG.*
- Place the tag on the back of the smartphone. Smartphone will detect the tag and take appropriate action. [4]

[3] NFC must be enabled
[4] NFC must be enabled

5 Ordering & Contact Information

Ordering Code	Description
AS3955-WL_DK_ST	AS3955 Demo Kit Standard Board

Buy our products or get free samples online at:
www.ams.com/ICdirect

Technical Support is available at:
www.ams.com/Technical-Support

Provide feedback about this document at:
www.ams.com/Document-Feedback

For further information and requests, e-mail us at:
ams_sales@ams.com

For sales offices, distributors and representatives, please visit:
www.ams.com/contact

Headquarters
ams AG
Tobelbaderstrasse 30
8141 Unterpremstaetten
Austria, Europe

Tel: +43 (0) 3136 500 0
Website: www.ams.com

6 Copyrights & Disclaimer

Copyright ams AG, Tobelbader Strasse 30, 8141 Unterpremstaetten, Austria-Europe. Trademarks Registered. All rights reserved. The material herein may not be reproduced, adapted, merged, translated, stored, or used without the prior written consent of the copyright owner.

Demo Kits, Evaluation Kits and Reference Designs are provided to recipient on an “as is” basis for demonstration and evaluation purposes only and are not considered to be finished end-products intended and fit for general consumer use, commercial applications and applications with special requirements such as but not limited to medical equipment or automotive applications. Demo Kits, Evaluation Kits and Reference Designs have not been tested for compliance with electromagnetic compatibility (EMC) standards and directives, unless otherwise specified. Demo Kits, Evaluation Kits and Reference Designs shall be used by qualified personnel only.

ams AG reserves the right to change functionality and price of Demo Kits, Evaluation Kits and Reference Designs at any time and without notice.

Any express or implied warranties, including, but not limited to the implied warranties of merchantability and fitness for a particular purpose are disclaimed. Any claims and demands and any direct, indirect, incidental, special, exemplary or consequential damages arising from the inadequacy of the provided Demo Kits, Evaluation Kits and Reference Designs or incurred losses of any kind (e.g. loss of use, data or profits or business interruption however caused) as a consequence of their use are excluded.

ams AG shall not be liable to recipient or any third party for any damages, including but not limited to personal injury, property damage, loss of profits, loss of use, interruption of business or indirect, special, incidental or consequential damages, of any kind, in connection with or arising out of the furnishing, performance or use of the technical data herein. No obligation or liability to recipient or any third party shall arise or flow out of ams AG rendering of technical or other services.

7 Revision Information

Initial version 1-00

Note: Page numbers for the previous version may differ from page numbers in the current revision.