Chipsmall Limited consists of a professional team with an average of over 10 year of expertise in the distribution of electronic components. Based in Hongkong, we have already established firm and mutual-benefit business relationships with customers from,Europe,America and south Asia,supplying obsolete and hard-to-find components to meet their specific needs.

With the principle of “Quality Parts,Customers Priority,Honest Operation,and Considerate Service”,our business mainly focus on the distribution of electronic components. Line cards we deal with include Microchip,ALPS,ROHM,Xilinx,Pulse,ON,Everlight and Freescale. Main products comprise IC,Modules,Potentiometer,IC Socket,Relay,Connector.Our parts cover such applications as commercial,industrial, and automotives areas.

We are looking forward to setting up business relationship with you and hope to provide you with the best service and solution. Let us make a better world for our industry!

# Contact us

Tel: +86-755-8981 8866 Fax: +86-755-8427 6832
Email & Skype: info@chipsmall.com Web: www.chipsmall.com
Address: A1208, Overseas Decoration Building, #122 Zhenhua RD., Futian, Shenzhen, China

| ITEM | CONNECTOR PART NO. | DESCRIPTION | IPI CHECK | EOR CHECK | Applicable Tooling |
|---|---|---|---|---|---|
| 1 | SRSF-82T-250A | RSF CONTACT, BRASS TIN-PLATED | | | APPLICATOR |
| 2 | UL1015, 16 AWG | BLACK (X2) | | | |

SUGGESTED MATING TAB
NO SCALE

| | WITHOUT STABILIZER | WITH STABILIZER |
|---|---|---|
| DIM. "A" | 2.20 [0.087] MIN. | 4.20±0.15 [0.165±0.006] |
| DIM. "B" | 7.40 [0.291] MIN. | 7.98 [0.314] MIN. |
| DIM. "C" | 5.90 [0.232] MAX. | (7.6) |

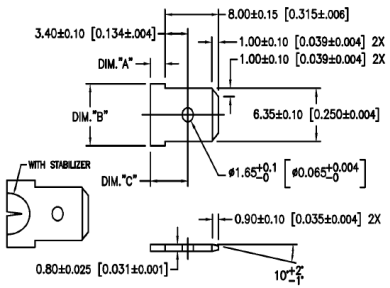


MATING TAB NOTES:
4. MAT'L: BRASS.
FINISH: SUGGESTED NO PLATING.

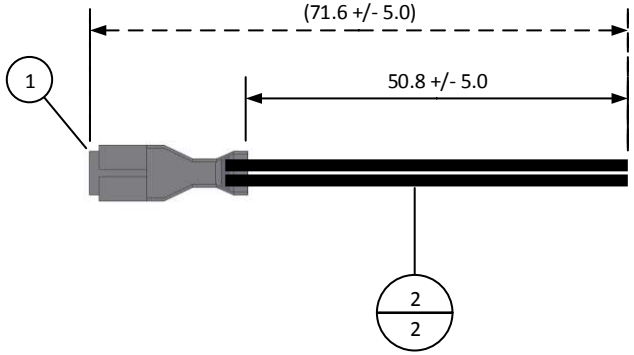


## Applicable Housings

| NO. OF CIRCUITS | KEYLESS HOUSING PART NO. |
|---|---|
| 2 | RSFP-2V-00 |
| 3 | RSFP-3V-00 |
| 4 | RSFP-4V-00 |
| 5 | RSFP-5V-00 |
| 6 | RSFP-6V-00 |
| 7 | RSFP-7V-00 |
| 8 | RSFP-8V-00 |
| 9 | RSFP-9V-00 |
| 10 | RSFP-10V-00 |
| 11 | RSFP-11V-00 |
| 12 | RSFP-12V-00 |

Other housings and configurations are available. Please contact JST for details.

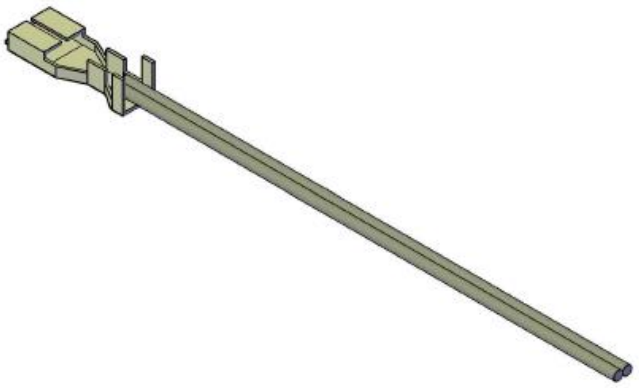

| REV. | DESCRIPTION | DATE | BY |
|---|---|---|---|
| | | | |

| | | |
|---|---|---|
| SCALE 1: 1 | CUSTOMER NAME | CUSTOMER PART NO. |
| DIMENSIONS All dimensions are in MM with a tolerance of +/- 3.0 unless otherwise specified. | DESCRIPTION 2" LIF, POS LOCK, .250, SINGLE-END, DOUBLE-CRIMP LEADS, BRASS TIN-PLATED, F-F | |
| DRAWN BY STEVEN PILKINGTON | ASSEMBLY PART NO. ASRSF2X16K51B | |
| CHECKED BY JUSTIN BAKER | DRAWING NO. & REVISION GAM-154 | REVISED 3/16/2016 |