Chipsmall Limited consists of a professional team with an average of over 10 year of expertise in the distribution of electronic components. Based in Hongkong, we have already established firm and mutual-benefit business relationships with customers from,Europe,America and south Asia,supplying obsolete and hard-to-find components to meet their specific needs.

With the principle of “Quality Parts,Customers Priority,Honest Operation,and Considerate Service”,our business mainly focus on the distribution of electronic components. Line cards we deal with include Microchip,ALPS,ROHM,Xilinx,Pulse,ON,Everlight and Freescale. Main products comprise IC,Modules,Potentiometer,IC Socket,Relay,Connector.Our parts cover such applications as commercial,industrial, and automotives areas.

We are looking forward to setting up business relationship with you and hope to provide you with the best service and solution. Let us make a better world for our industry!

Contact us

Tel: +86-755-8981 8866 Fax: +86-755-8427 6832
Email & Skype: info@chipsmall.com Web: www.chipsmall.com
Address: A1208, Overseas Decoration Building, #122 Zhenhua RD., Futian, Shenzhen, China

P1

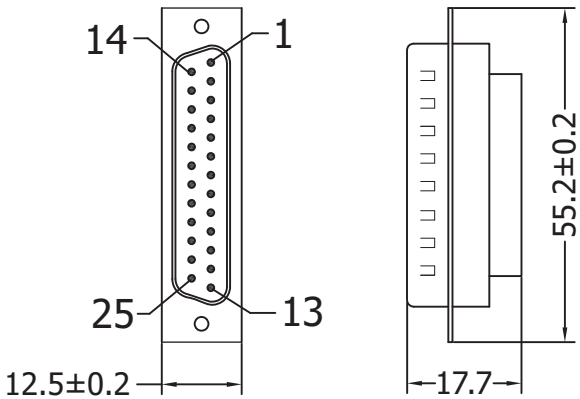

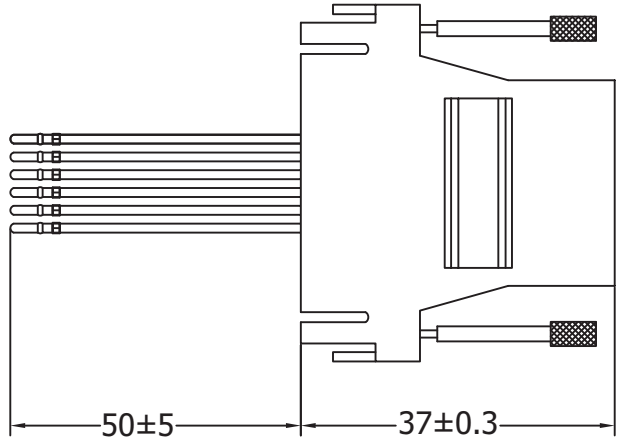

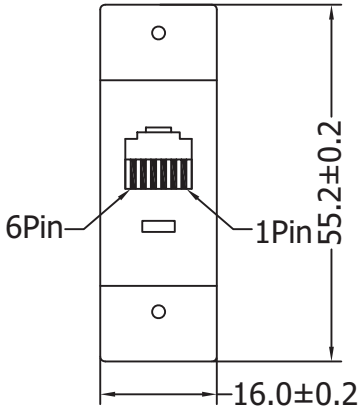

P2

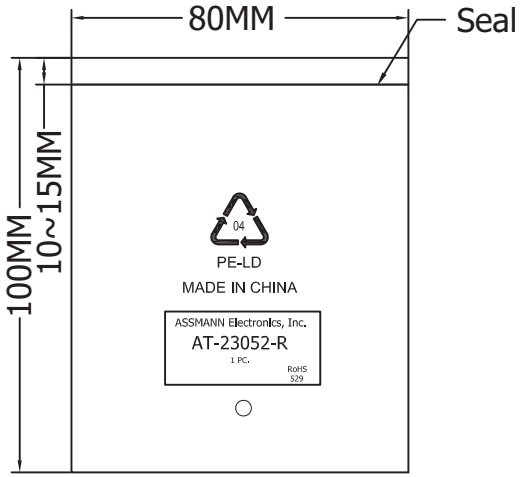

1PCS/PE Bag

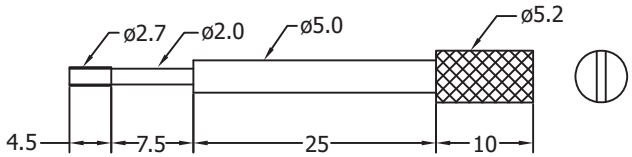

Pin Assignment

P1	P2
White	1
Black	2
Red	3
Green	4
Yellow	5
Blue	6

Material:

- Cable: UL 26AWG, 60MM
  - Blue, Black, Red, Green, Yellow, White
- P1 Connector: D-Sub 25-Pin Male
  - Crimp Type
  - Black Insulation
- P2 Connector: RJ12 6P6C Female 3μ"
- Color: Beige
- PVC Housing
- Thumbscrew: 5*37MM

RoHS Complaint

Scale	1:1
TOLERANCE	
X.X	±0.40
X.XX	±0.25
X.XXX	±0.15
Angle	±3°

Modification	Date	Name

		Name
Drawn	11.22.11	Chappell
Approved		

ASSMANN WSW components

Item No. AT-23052-R

Title D-Siub Modular Adapter, 25 Pin Male <=> RJ12 Female, Beige

Drawing No.

rev00

Replace

Sheet