Chipsmall Limited consists of a professional team with an average of over 10 year of expertise in the distribution of electronic components. Based in Hongkong, we have already established firm and mutual-benefit business relationships with customers from,Europe,America and south Asia,supplying obsolete and hard-to-find components to meet their specific needs.

With the principle of “Quality Parts,Customers Priority,Honest Operation,and Considerate Service”,our business mainly focus on the distribution of electronic components. Line cards we deal with include Microchip,ALPS,ROHM,Xilinx,Pulse,ON,Everlight and Freescale. Main products comprise IC,Modules,Potentiometer,IC Socket,Relay,Connector.Our parts cover such applications as commercial,industrial, and automotives areas.

We are looking forward to setting up business relationship with you and hope to provide you with the best service and solution. Let us make a better world for our industry!

Contact us

Tel: +86-755-8981 8866 Fax: +86-755-8427 6832
Email & Skype: info@chipsmall.com Web: www.chipsmall.com
Address: A1208, Overseas Decoration Building, #122 Zhenhua RD., Futian, Shenzhen, China

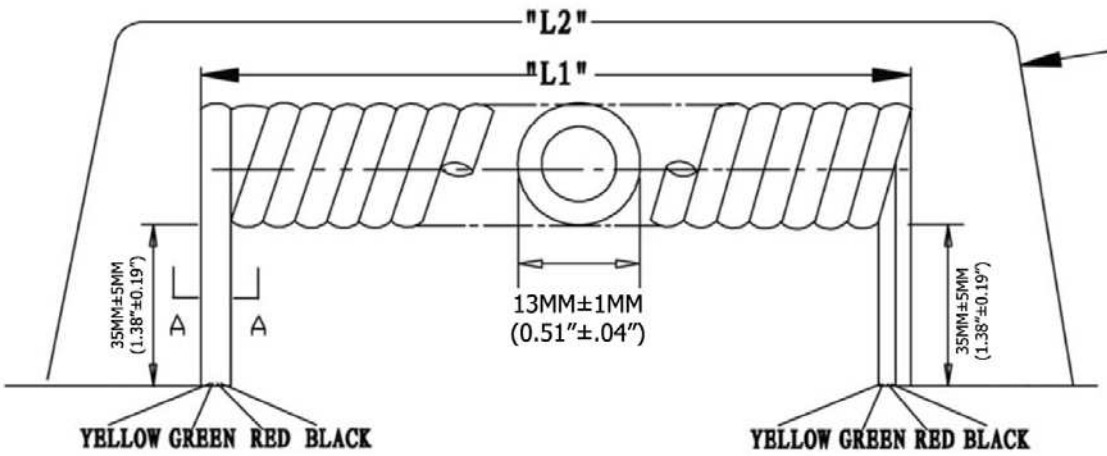

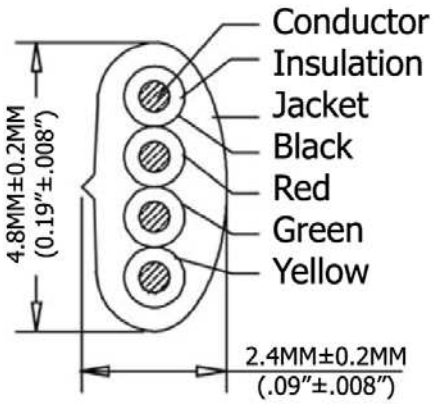

SEC:A–A

Extended Length ("L2")	Typical Retracted Length ("L1")
168.0 Inches - 193.2 Inches	33.5 Inches
4,267.2MM-4,907.28MM	850.9MM

Material:

- Conductor(X4C): 26AWG (0.12X12) Bare Copper
- Insulation(X4C):PP6331 ID 0.95-1.0
- Jacket: PVC NO UL 80P
- Package: Individual PE Bag

RoHS Complaint

Scale	1:1							Name
TOLERANCE						Drawn	12.19.11	Chappell
X.X	±0.40					Approved		
X.XX	±0.25							
X.XXX	±0.15							
Angle	±3°							
			Modification	Date	Name			

ASSMANN WSW components

Item No.
AT-K-C-26-4-B/14

Title
NON-UL 26AWG (0.16/7)*4C,
O.D.: 2.4*4.8MM, Pre-Cut, 14Ft., Black

Drawing No.

rev00

Replace

Sheet