Chipsmall Limited consists of a professional team with an average of over 10 year of expertise in the distribution of electronic components. Based in Hongkong, we have already established firm and mutual-benefit business relationships with customers from,Europe,America and south Asia,supplying obsolete and hard-to-find components to meet their specific needs.

With the principle of “Quality Parts,Customers Priority,Honest Operation,and Considerate Service”,our business mainly focus on the distribution of electronic components. Line cards we deal with include Microchip,ALPS,ROHM,Xilinx,Pulse,ON,Everlight and Freescale. Main products comprise IC,Modules,Potentiometer,IC Socket,Relay,Connector.Our parts cover such applications as commercial,industrial, and automotives areas.

We are looking forward to setting up business relationship with you and hope to provide you with the best service and solution. Let us make a better world for our industry!

Contact us

Tel: +86-755-8981 8866 Fax: +86-755-8427 6832
Email & Skype: info@chipsmall.com Web: www.chipsmall.com
Address: A1208, Overseas Decoration Building, #122 Zhenhua RD., Futian, Shenzhen, China

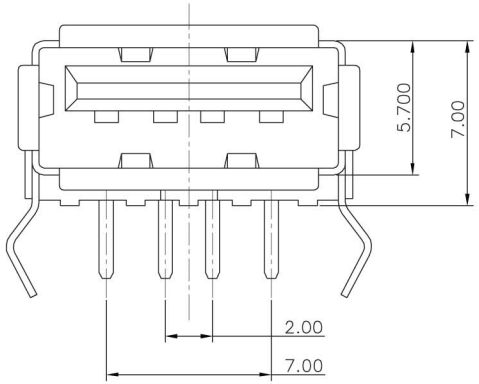

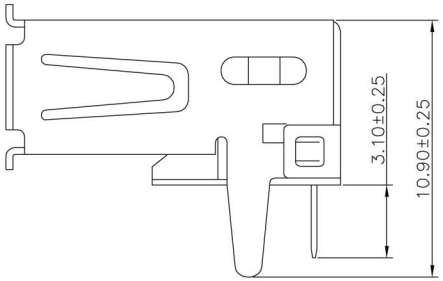

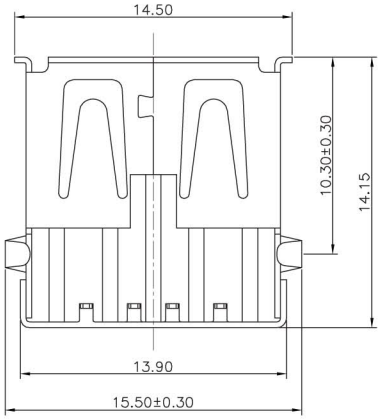

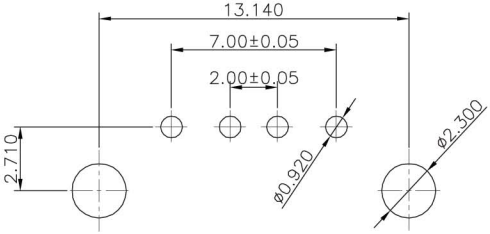

Recommended PCB Layout

Material:
- Housing: PBT+30% G.F. UL 94V-0
- Contact: Brass
- Shell: Brass

Plating:
- Contacts: Gold Flash & Tin over Nickel plated
- Shell: Nickel over all plating

Electrical:
- Current - Max(Amps): 1.5A
- Voltage - Max(Volts): 30V
- Withstanding voltage: 500V AC
- Contact Resistance: 30MΩ Max.
- Insulation Resistance: 1,000MΩ Min.

Environmental:
- Temperature: -55°C ~ +50°C
- Reflow Temperature: 223 C Max.

Unit: MM±0.15MM

Scale	1:1
TOLERANCE	
X.X	±0.40
X.XX	±0.25
X.XXX	±0.15
Angle	±3°

Modification	Date	Name

		Name
Drawn	10.19.11	Chappell
Approved		

Item No.
AU-Y1005-R

Title USB 1.1 Type A Connector - for PCB Mounting, 5μ" Gold, White Insulator

Drawing No. **rev00**

Replace | Sheet

RoHS Complaint

ASSMANN WSW components