Chipsmall Limited consists of a professional team with an average of over 10 year of expertise in the distribution of electronic components. Based in Hongkong, we have already established firm and mutual-benefit business relationships with customers from,Europe,America and south Asia,supplying obsolete and hard-to-find components to meet their specific needs.

With the principle of “Quality Parts,Customers Priority,Honest Operation,and Considerate Service”,our business mainly focus on the distribution of electronic components. Line cards we deal with include Microchip,ALPS,ROHM,Xilinx,Pulse,ON,Everlight and Freescale. Main products comprise IC,Modules,Potentiometer,IC Socket,Relay,Connector.Our parts cover such applications as commercial,industrial, and automotives areas.

We are looking forward to setting up business relationship with you and hope to provide you with the best service and solution. Let us make a better world for our industry!

Contact us

Tel: +86-755-8981 8866 Fax: +86-755-8427 6832
Email & Skype: info@chipsmall.com Web: www.chipsmall.com
Address: A1208, Overseas Decoration Building, #122 Zhenhua RD., Futian, Shenzhen, China

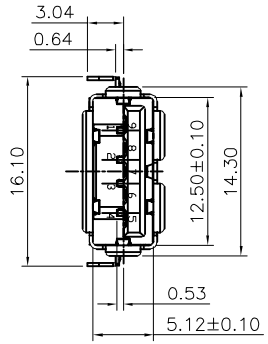

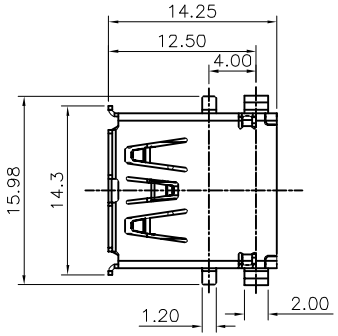

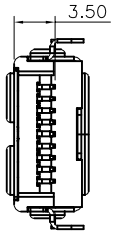

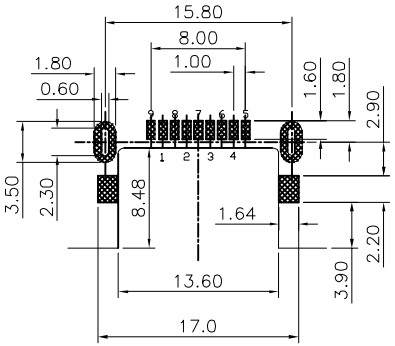

RECOMMENDED P.C.B LAYOUT
(TOLERANCE:±0.05)

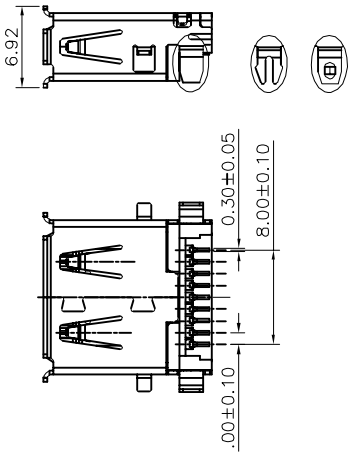

NOTES:

1.Material:
- 1.1 Housing: LCP+30%GF UL94V-0, Color Blue
- 1.2 Shell: Brass
- 1.3 Contact :Copper Alloy

2. FINISH:
- 2.1 Contact Area: Selective 15u"Au
  Solder Area:Tin Plated
  Under: Ni Plated

3.MECHANICAL:
- 3.1 Mating Force:3.57kgf Max.
- 3.2 Unmating Force:1.02kgf Min
- 3.3 Durability:5000 cycles

4.ELECTRICAL:
- 4.1 Current Rating:1.8A For PIN1 TO PIN4. 0.25A For other PIN
- 4.2 Dielectric Strength:100V AC FOR 1 MINUTE
- 4.3 Contact Resistance:30mΩ Max .For PIN1 TO PIN4
  50mΩ Max .For other PIN
- 4.4 Insulation Resistance:100 MΩ Min

5.Operating temperature: -55°C TO +85°C

6.PACKIING: Tape&Reel

RoHS compliant

Scale	Free						Date	Name
TOLERANCE						Drawn	07.06.2013	Winnie
.X	±0.30					Approved	31.10.2013	Winnie
.XX	±0.20							
.XXX	±0.10							
DIM	TOL	①	Update the mating cycles	31.10.2013	Winnie			
X.°	±5°	⓪	Drawn	07.06.2013	Winnie			
Angle	TOL							
UNIT	mm	Id.	Modification	Date	Name			

ASSMANN WSW components

Customer-No.

ASSMANN WSW-No.
AU-Y1006-3

Drawing-No.
ASS 5775 CO

rev01

Replace

SHEET