Chipsmall Limited consists of a professional team with an average of over 10 year of expertise in the distribution of electronic components. Based in Hongkong, we have already established firm and mutual-benefit business relationships with customers from,Europe,America and south Asia,supplying obsolete and hard-to-find components to meet their specific needs.

With the principle of “Quality Parts,Customers Priority,Honest Operation,and Considerate Service”,our business mainly focus on the distribution of electronic components. Line cards we deal with include Microchip,ALPS,ROHM,Xilinx,Pulse,ON,Everlight and Freescale. Main products comprise IC,Modules,Potentiometer,IC Socket,Relay,Connector.Our parts cover such applications as commercial,industrial, and automotives areas.

We are looking forward to setting up business relationship with you and hope to provide you with the best service and solution. Let us make a better world for our industry!

Contact us

Tel: +86-755-8981 8866 Fax: +86-755-8427 6832
Email & Skype: info@chipsmall.com Web: www.chipsmall.com
Address: A1208, Overseas Decoration Building, #122 Zhenhua RD., Futian, Shenzhen, China

MOUNTING INSTRUCTION:
USE 2-56 MACHINE SCREWS OR EYELETS 0.089" OD BY 0.15" FLANGE STIMPSON GS-3 SERIES OR EQUIVALENT. ALSO ADHESIVES AND DOUBLE SIDED TAPES WORK WELL.

Date	SYM	REVISION RECORD	AUTH	DR.	CK.
10/17/14	A	Updated to ROHS 2 Compliant Added Specification	T.B.	B.S.	
01/29/16	B	Updated Flammability Rating	T.B.	B.S.	

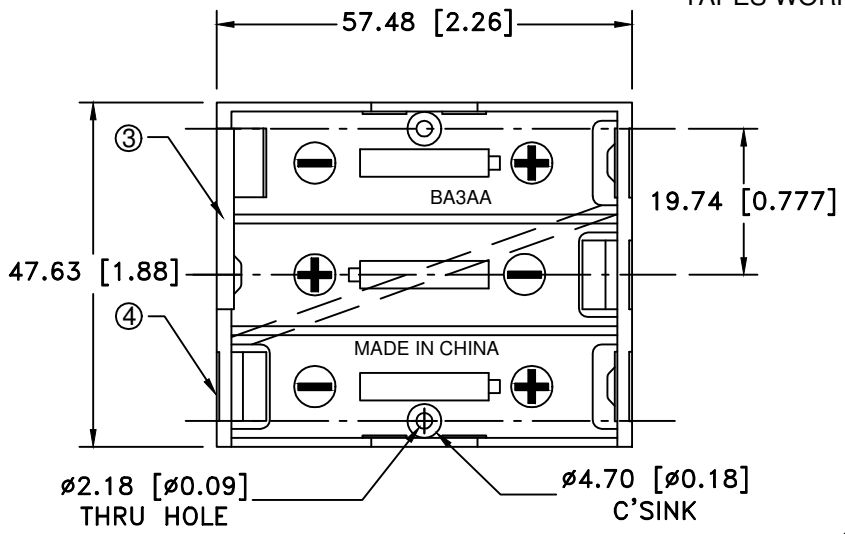

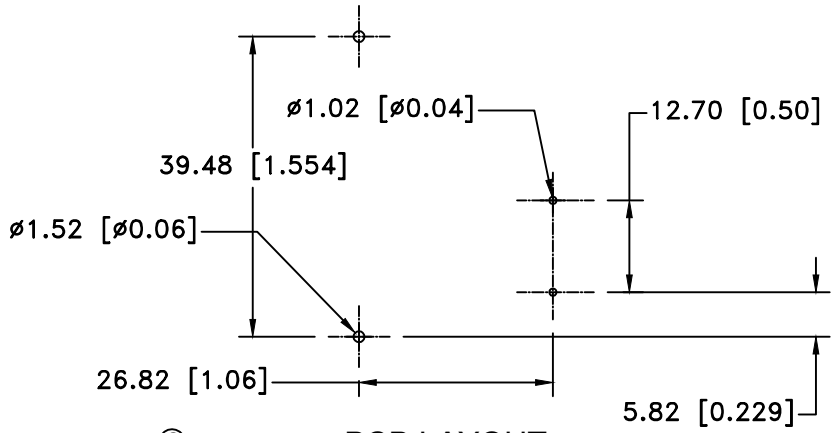

PCB LAYOUT

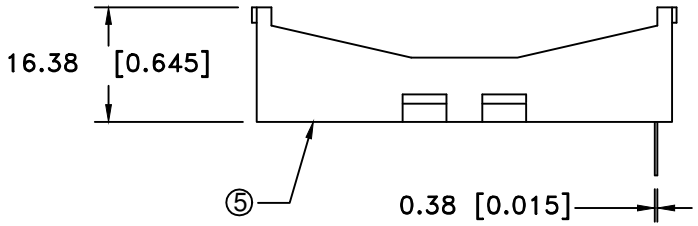

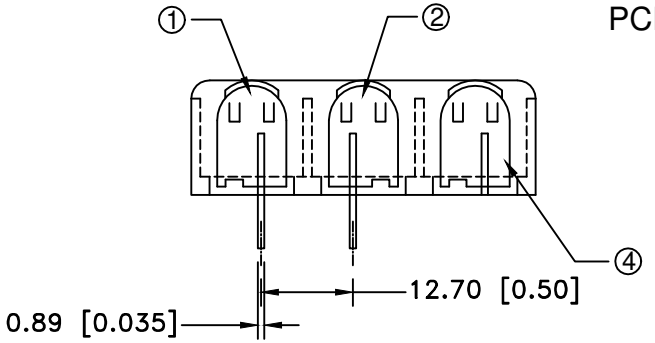

ROHS 2 COMPLIANT

ITEM NO.	PART NO.	MATL. SPECIFICATION	QTY.
1	ABG-194	POSITIVE CONTACT, 302 STAINLESS STEEL, NICKLE PLTD.	2
2	ABG-195	NEGATIVE CONTACT, 302 STAINLESS STEEL, NICKLE PLTD.	1
3	ABG-196-1	RIGHT NEG./POS. CONTACT, 302 STAINLESS STEEL, NICKLE PLTD.	1
4	ABG-201	ASSY. NEG./POS. CONTACT, 302 STAINLESS STEEL, NICKLE PLTD.	1
5	ABG-198	BLACK POLYPROPYLENE HOLDER, UL94-V0	1

SPECIFICATION:
1. HOUSING : BLACK POLYPROPYLENE, PP-1040
   FLAMMABILITY RATING -UL94-v-0, UL FILE NO. E216959
   TEMPERATURE RANGE: -10°C to +100°C
   CONTACT RESISTANCE: UNDER 50mΩ FOR +/- CONTACTS PER EIA-540J000

Tolerance (Except as noted)
decimal ±.5 (.020)
Fractional ± .8 (.030)
Angular ± 3°

MPD Memory Protection Devices, Inc
200 Broad Hollow Road, Farmingdale, New York 11735

Scale
Drawn By B.S.
Approved By T.B.

Title: THREE "AA" CELL SPRINGLESS HOLDER

Date 01/29/16

Drawing Number BA3AAPC-UL94V-0