Chipsmall Limited consists of a professional team with an average of over 10 year of expertise in the distribution of electronic components. Based in Hongkong, we have already established firm and mutual-benefit business relationships with customers from,Europe,America and south Asia,supplying obsolete and hard-to-find components to meet their specific needs.

With the principle of “Quality Parts,Customers Priority,Honest Operation,and Considerate Service”,our business mainly focus on the distribution of electronic components. Line cards we deal with include Microchip,ALPS,ROHM,Xilinx,Pulse,ON,Everlight and Freescale. Main products comprise IC,Modules,Potentiometer,IC Socket,Relay,Connector.Our parts cover such applications as commercial,industrial, and automotives areas.

We are looking forward to setting up business relationship with you and hope to provide you with the best service and solution. Let us make a better world for our industry!

Contact us

Tel: +86-755-8981 8866 Fax: +86-755-8427 6832
Email & Skype: info@chipsmall.com Web: www.chipsmall.com
Address: A1208, Overseas Decoration Building, #122 Zhenhua RD., Futian, Shenzhen, China

07530GA (ø75 x 30L)

Legacy Part No. BG0703

General Specifications

Motor Protection:
Auto Restart/Polarity Protection

Insulation Resistance:
10M Ω or over with a DC500V Megger

Dielectric Withstand Voltage: AC 700V 1s

Allowable Ambient Temperature Range:
-10°C ~ +70°C (Operating)
-40°C ~ +70°C (Storage)
(non-condensing environment)

Expected Life

Failure Rate: 10%
25°C 70,000 Hours

Material

Casing : Plastic (Black) UL94V-0
Impeller : Plastic (Black) UL94V-0
Bearing : Ball Bearing
Lead Wire : UL1007, AWG26, +Red, -Black

Characteristic Curves

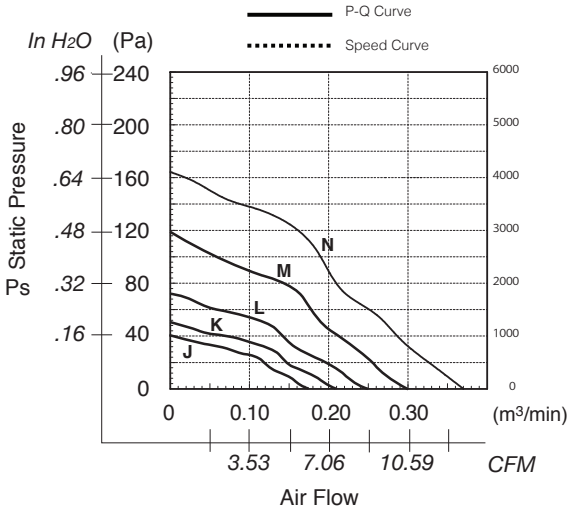

Outline

Units: inch (mm)

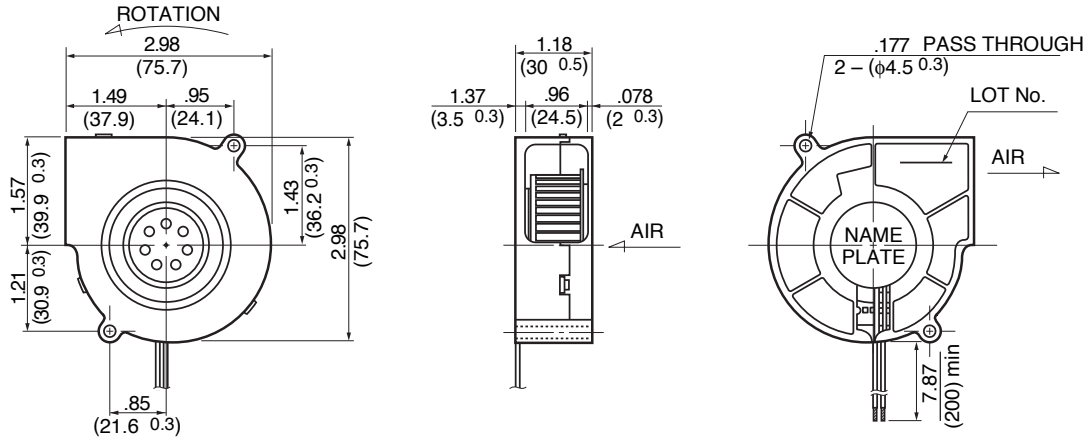

Specifications

MODEL	LEGACY P/N	Rated Voltage	Operating Voltage	Current	Input Power	Speed	Max. Air Flow		Max. Static Pressure		Noise	Mass
		(V)	(V)	(A)*1	(W)*1	(min⁻¹)*1	CFM*1	(m³/min)*1	in H2O	(Pa)*1	(dB)*1	(g)
07530GA-12J-AA-00	BG0703-B041-000-00	12	6 ~ 13.8	0.10	1.20	2000	6.7	0.19	.16	40	28.0	90
07530GA-12K-AA-00	BG0703-B042-000-00	12	6 ~ 13.8	0.12	1.44	2200	7.4	0.21	.20	50	29.5	90
07530GA-12L-AA-00	BG0703-B043-000-00	12	6 ~ 13.8	0.18	2.16	2550	8.8	0.25	.30	75	34.5	90
07530GA-12M-AA-00	BG0703-B044-000-00	12	6 ~ 13.0	0.29	3.48	3000	10.6	0.30	.44	110	38.5	90
07530GA-12N-AA-00	BG0703-B045-000-00	12	6 ~ 13.0	0.51	6.12	3650	13.1	0.37	.66	164	43.0	90
07530GA-24J-AA-00	BG0703-B051-000-00	24	10 ~ 27.6	0.06	1.44	2000	6.7	0.19	.16	40	28.0	90
07530GA-24K-AA-00	BG0703-B052-000-00	24	10 ~ 27.6	0.07	1.68	2200	7.4	0.21	.20	50	29.5	90
07530GA-24L-AA-00	BG0703-B053-000-00	24	10 ~ 27.6	0.09	2.16	2550	8.8	0.25	.30	75	34.5	90
07530GA-24M-AA-00	BG0703-B054-000-00	24	10 ~ 26.0	0.15	3.60	3000	10.6	0.30	.44	110	38.5	90
07530GA-24N-AA-00	BG0703-B055-000-00	24	10 ~ 26.2	0.20	4.80	3650	13.1	0.37	.66	164	43.0	90

Rotation: Counterclockwise *1: Average Values in Free Air Note: PWM/Locked Rotor/Tach Available