Chipsmall Limited consists of a professional team with an average of over 10 year of expertise in the distribution of electronic components. Based in Hongkong, we have already established firm and mutual-benefit business relationships with customers from,Europe,America and south Asia,supplying obsolete and hard-to-find components to meet their specific needs.

With the principle of “Quality Parts,Customers Priority,Honest Operation,and Considerate Service”,our business mainly focus on the distribution of electronic components. Line cards we deal with include Microchip,ALPS,ROHM,Xilinx,Pulse,ON,Everlight and Freescale. Main products comprise IC,Modules,Potentiometer,IC Socket,Relay,Connector.Our parts cover such applications as commercial,industrial, and automotives areas.

We are looking forward to setting up business relationship with you and hope to provide you with the best service and solution. Let us make a better world for our industry!

Contact us

Tel: +86-755-8981 8866 Fax: +86-755-8427 6832
Email & Skype: info@chipsmall.com Web: www.chipsmall.com
Address: A1208, Overseas Decoration Building, #122 Zhenhua RD., Futian, Shenzhen, China

BGM1033N7

GPS and GLONASS Front-End Module

Data Sheet

Revision 3.2, 2011-07-18

RF & Protection Devices

Edition 2011-07-18

Published by
Infineon Technologies AG
81726 Munich, Germany

© 2011 Infineon Technologies AG
All Rights Reserved.

Legal Disclaimer

The information given in this document shall in no event be regarded as a guarantee of conditions or characteristics. With respect to any examples or hints given herein, any typical values stated herein and/or any information regarding the application of the device, Infineon Technologies hereby disclaims any and all warranties and liabilities of any kind, including without limitation, warranties of non-infringement of intellectual property rights of any third party.

Information

For further information on technology, delivery terms and conditions and prices, please contact the nearest Infineon Technologies Office (**www.infineon.com**).

Warnings

Due to technical requirements, components may contain dangerous substances. For information on the types in question, please contact the nearest Infineon Technologies Office.

Infineon Technologies components may be used in life-support devices or systems only with the express written approval of Infineon Technologies, if a failure of such components can reasonably be expected to cause the failure of that life-support device or system or to affect the safety or effectiveness of that device or system. Life support devices or systems are intended to be implanted in the human body or to support and/or maintain and sustain and/or protect human life. If they fail, it is reasonable to assume that the health of the user or other persons may be endangered.

BGM1033N7 GPS and GLONASS Front-End Module

Revision History: 2011-07-18, Revision 3.2

Previous Revision: 2011-06-30, Revision 3.1

Page	Subjects (major changes since last revision)
9	Updated value for Out-of-band 3rd Order Intercept Point
16	Updated carrier tape drawing

Trademarks of Infineon Technologies AG

AURIX™, C166™, CanPAK™, CIPOS™, CIPURSE™, EconoPACK™, CoolMOS™, CoolSET™, CORECONTROL™, CROSSAVE™, DAVE™, EasyPIM™, EconoBRIDGE™, EconoDUAL™, EconoPIM™, EiceDRIVER™, eupec™, FCOS™, HITFET™, HybridPACK™, I²RF™, ISOFACE™, IsoPACK™, MIPAQ™, ModSTACK™, my-d™, NovalithIC™, OptiMOS™, ORIGA™, PRIMARION™, PrimePACK™, PrimeSTACK™, PRO-SIL™, PROFET™, RASIC™, ReverSave™, SatRIC™, SIEGET™, SINDRION™, SIPMOS™, SmartLEWIS™, SOLID FLASH™, TEMPFET™, thinQ!™, TRENCHSTOP™, TriCore™.

Other Trademarks

Advance Design System™ (ADS) of Agilent Technologies, AMBA™, ARM™, MULTI-ICE™, KEIL™, PRIMECELL™, REALVIEW™, THUMB™, µVision™ of ARM Limited, UK. AUTOSAR™ is licensed by AUTOSAR development partnership. Bluetooth™ of Bluetooth SIG Inc. CAT-iq™ of DECT Forum. COLOSSUS™, FirstGPS™ of Trimble Navigation Ltd. EMV™ of EMVCo, LLC (Visa Holdings Inc.). EPCOS™ of Epcos AG. FLEXGO™ of Microsoft Corporation. FlexRay™ is licensed by FlexRay Consortium. HYPERTERMINAL™ of Hilgraeve Incorporated. IEC™ of Commission Electrotechnique Internationale. IrDA™ of Infrared Data Association Corporation. ISO™ of INTERNATIONAL ORGANIZATION FOR STANDARDIZATION. MATLAB™ of MathWorks, Inc. MAXIM™ of Maxim Integrated Products, Inc. MICROTEC™, NUCLEUS™ of Mentor Graphics Corporation. Mifare™ of NXP. MIPI™ of MIPI Alliance, Inc. MIPS™ of MIPS Technologies, Inc., USA. muRata™ of MURATA MANUFACTURING CO., MICROWAVE OFFICE™ (MWO) of Applied Wave Research Inc., OmniVision™ of OmniVision Technologies, Inc. Openwave™ Openwave Systems Inc. RED HAT™ Red Hat, Inc. RFMD™ RF Micro Devices, Inc. SIRIUS™ of Sirius Satellite Radio Inc. SOLARIS™ of Sun Microsystems, Inc. SPANSION™ of Spansion LLC Ltd. Symbian™ of Symbian Software Limited. TAIYO YUDEN™ of Taiyo Yuden Co. TEAKLITE™ of CEVA, Inc. TEKTRONIX™ of Tektronix Inc. TOKO™ of TOKO KABUSHIKI KAISHA TA. UNIX™ of X/Open Company Limited. VERILOG™, PALLADIUM™ of Cadence Design Systems, Inc. VLYNQ™ of Texas Instruments Incorporated. VXWORKS™, WIND RIVER™ of WIND RIVER SYSTEMS, INC. ZETEX™ of Diodes Zetex Limited.

Last Trademarks Update 2011-02-24

Table of Contents

Table of Contents 4

1 Features 5

2 Electrical Characteristics 7
2.1 Absolute Maximum Ratings 7
2.2 ESD Integrity 8
2.3 RF Characteristics 9

3 Application Circuit and Block Diagram 11
3.1 Application Circuit Schematic 11
3.2 Pin Description 12
3.3 Application Board 13

4 Package Information 14
4.1 Package Footprint 14
4.2 Package Dimensions 15
4.3 Product Marking Pattern 15

5 Packing Information 16

1 Features

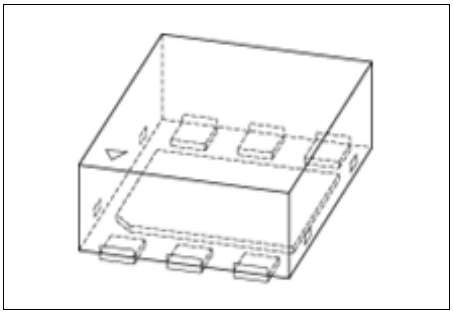

Main features:

- Operating frequencies: 1575.42 MHz and 1598.06-1605.38 MHz
- High Gain: 14.8 dB
- Low Noise Figure (GPS): 1.65 dB
- Low current consumption: 4.0 mA
- Out-of-band rejection in cellular bands: > 43 dBc
- Input compression point in cellular bands: 30 dBm
- Supply voltage: 1.5 V to 3.6 V
- Tiny TSNP-7-10 leadless package (2.3 x 1.7 x 0.73 mm^3)
- RF output internally matched to 50 Ω
- IEC ESD contact discharge of RF input pin: 6 kV
- Only 3 external SMD parts
- RoHS compliant package (Pb-free)

Description

The BGM1033N7 is a combination of a low-insertion-loss pre-filter with Infineon's high performance low noise amplifier (LNA) for Global Positioning System (GPS) and Globalnaya Navigatsionnaya Sputnikovaya Sistema (GLONASS) applications. Both, GPS and GLONASS frequency bands, can be used at the same time. Through the low insertion loss of the filter, the BGM1033N7 provides 14.8 dB gain, 1.65 dB noise figure and high linearity performance. In addition BGM1033N7 provides very high out-of-band attenuation in conjunction with a high input compression point. It can withstand IEC ESD contact discharge at the RF input as high as 6 kV. Its current consumption is as low as 4.0 mA. It operates over the 1.5 V to 3.6 V supply voltage range.

Product Name	Package	Marking
BGM1033N7	TSNP-7-10	M33

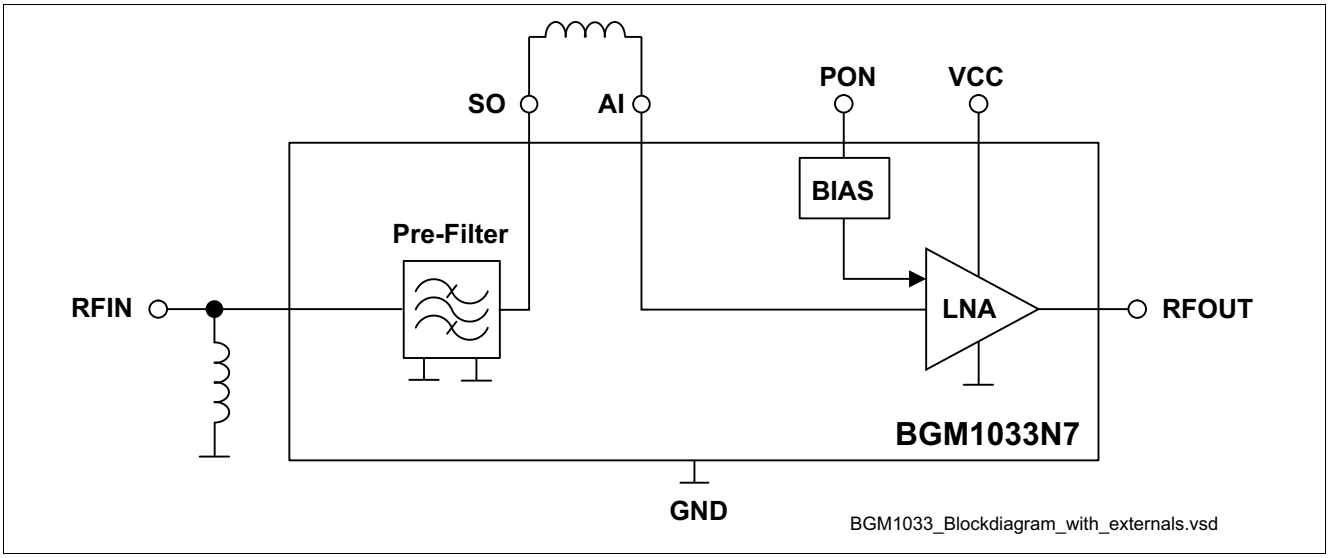

Figure 1 Block Diagram with Main External Components

2 Electrical Characteristics

2.1 Absolute Maximum Ratings

Table 1 Absolute Maximum Ratings

Parameter	Symbol	Values			Unit	Note / Test Condition
		Min.	Typ.	Max.		
Voltage at pin PON to GND	V_{PON}	-0.3	–	3.6	V	–
Voltage at pin VCC to GND	V_{CC}	-0.3	–	3.6	V	–
Voltage at pin RFIN to GND	V_{RFIN}	-3	–	3	V	–
Voltage at pin SO to GND	V_{BO}	-3	–	3	V	–
Voltage at pin AI to GND	V_{AI}	-0.3	–	0.75	V	–
Voltage at pin RFOUT to GND	V_{RFOUT}	-0.3	–	V_{CC}+0.3	V	–
Current into pin VCC	I_{VCC}	–	–	25	mA	–
RF input power inband	P_{IN}	–	–	0	dBm	Continuous wave signal f = 1575.42 MHz 50 Ω source and load impedances
RF input power out of band	$P_{IN,OBB}$	–	–	25	dBm	Continuous wave signal f = 50 - 1460 MHz and 1710 - 4000 MHz 50 Ω source and load impedances
Total power dissipation	P_{tot}	–	–	90	mW	–
Junction temperature	T_j	–	–	150	°C	–
Ambient temperature range	T_A	-40	–	85	°C	–
Storage temperature range	T_{stg}	-65	–	150	°C	–

Attention: Stresses above the max. values listed here may cause permanent damage to the device. Exposure to absolute maximum rating conditions for extended periods may affect device reliability. Maximum ratings are absolute ratings; exceeding only one of these values may cause irreversible damage to the integrated circuit.

2.2 ESD Integrity

Table 2 ESD Integrity

Parameter	Symbol	Values			Unit	Note / Test Condition
		Min.	Typ.	Max.		
ESD capability HBM of pins 1, 2, 5 and 6	V_{ESD1}	–	–	2	kV	According to JESD22-A114
ESD capability HBM of pins 3 and 4	V_{ESD2}	–	–	300	V	According to JESD22-A114
ESD contact discharge capability of RF input pin 3	V_{ESD3}	–	–	6	kV	According to IEC61000-4-2
ESD capability MM of RF input pin 3 and pre-filter output pin 4	V_{ESD4}	–	–	50	V	According to JESD22-A115

2.3 RF Characteristics

Table 3 Typical Characteristics: T_A = 25 °C, V_{CC} = 2.7 V, $V_{PON,ON}$ = 2.7 V, $V_{PON,OFF}$ = 0 V[1)]

Parameter	Symbol	Values			Unit	Note / Test Condition
		Min.	Typ.	Max.		
Supply Voltage	V_{CC}	1.5	2.7	3.6	V	–
Supply Current	I_{CC}	–	4.0	–	mA	ON-Mode
		–	0.2	3	µA	OFF-Mode
Power On Control Voltage	V_{PON}	1.0	–	Vcc	V	ON-Mode
		0	–	0.4	V	OFF-Mode
Power On Control Current	I_{PON}	–	9.5	–	µA	ON-Mode
		–	–	1	µA	OFF-Mode
Power Gain Settling Time[2)]	t_S	–	5	–	µs	OFF- to ON-Mode
		–	5	–	µs	ON- to OFF-mode
Passband Parameters @ f = 1575.42, 1598.06-1605.38 MHz	–	–	–	–	–	–
Insertion Power Gain	$\|S_{21}\|^2$	–	14.8	–	dB	
Noise Figure GPS[3)]	NF	–	1.65	2.2	dB	Z_S = 50 Ω f = 1575.42 MHz
Noise Figure GLONASS[3)]	NF	–	2.0	2.5	dB	Z_S = 50 Ω f = 1598.06-1605.38 MHz
Group Delay Ripple	T_G	–	8	–	ns	f = 1575 MHz, 1598 - 1605 MHz
Input Return Loss	RL_{IN}	–	15	–	dB	–
Output Return Loss	RL_{OUT}	–	15	–	dB	–
Reverse Isolation	$1/\|S_{12}\|^2$	–	22	–	dB	–
Inband Input 3rd Order Intercept Point	IIP_3	–	-6	–	dBm	f_1 = 1575.42 MHz $f_2 = f_1$ + 1 MHz
Inband Input 1 dB Compression Point	IP_{1dB}	–	-6	–	dBm	f_1 = 1575.42 MHz
Out-of-band 3rd Order Intercept Point[4)]	IIP_{3OOB}	–	60	–	dBm	f_1 = 1712.7 MHz f_2 = 1850 MHz
Out-of-band Input 1 dB Compression Point[5)]	IP_{1dB_900M}	–	30	–	dBm	f_1 = 900 MHz
Out-of-band Input 1 dB Compression Point[5)]	IP_{1dB_1710M}	–	30	–	dBm	f_1 = 1710 MHz
Stopband Parameters	–	–	–	–	–	–
Rejection[6)]	Rej_{750M}	–	54	–	dBc	f = 750 MHz
Rejection[6)]	Rej_{900M}	–	53	–	dBc	f = 806 MHz - 928 MHz
Rejection[6)]	Rej_{1800M}	–	43	–	dBc	f = 1710 MHz - 1980 MHz

Table 3 Typical Characteristics: T_A = 25 °C, V_{CC} = 2.7 V, $V_{PON,ON}$ = 2.7 V, $V_{PON,OFF}$ = 0 V[1)]

Parameter	Symbol	Values			Unit	Note / Test Condition
		Min.	Typ.	Max.		
Rejection[6)]	Rej_{2400M}	–	54	–	dBc	f = 2400 MHz - 2500 MHz
Stability	k	–	>1	–	–	f = 20 MHz - 20 GHz

1) Measured on application board including PCB losses (unless noted otherwise)
2) To be within 1 dB of the final gain OFF- to ON-mode; to be within 3 dB of the final gain ON- to OFF-mode
3) PCB and connector losses subtracted, verified on AQL base
4) Input power = +10 dBm for each tone
5) Guaranteed by device design, not measured in production
6) Rejection = $|(1/|S_{21}|^2$ at stopband frequency)| + $|(1/|S_{21}|^2$ at 1575.42 MHz)|

3 Application Circuit and Block Diagram

3.1 Application Circuit Schematic

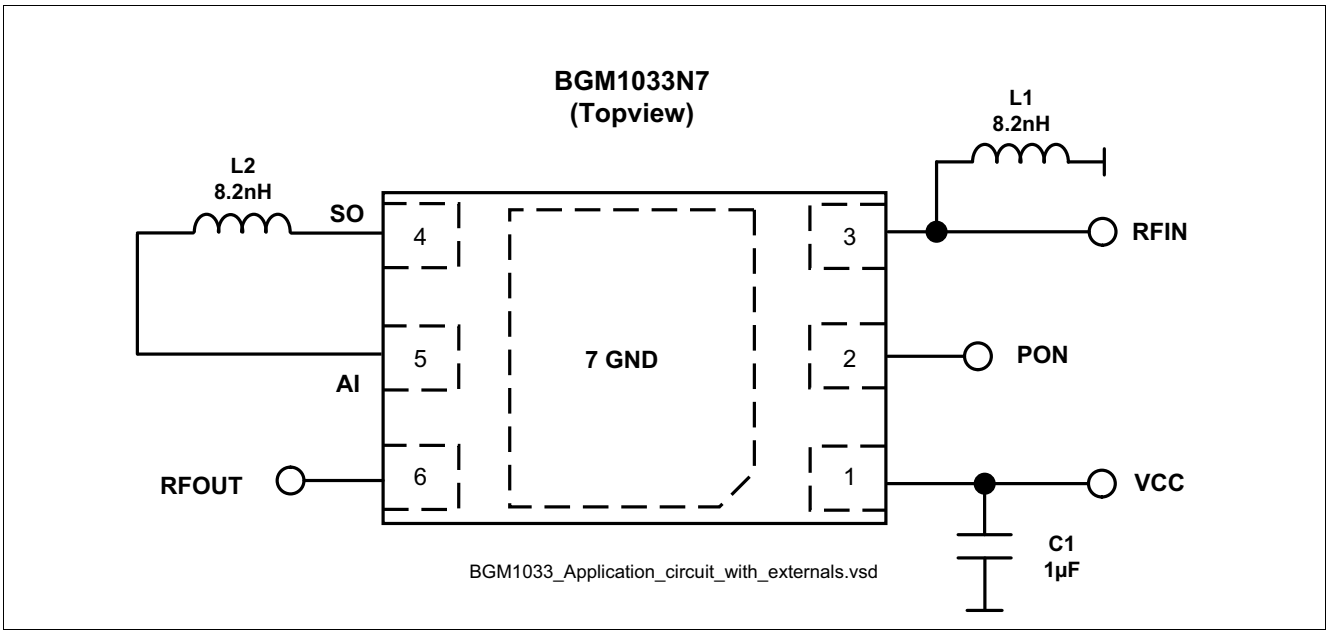

Figure 2 Application Circuit with Chip Outline (top view)

Table 4 Parts List

Part Number	Part Type	Manufacturer	Size	Comment
C1	Chip capacitor	Various	0402	Supply filtering
L1	Chip inductor	muRata LQW15A	0402	Matching + ESD protection inductor
L2	Chip inductor	muRata LQW15A	0402	Input Matching
N1	BGM1033N7	Infineon	TSNP-7-10	GPS FE-Module

3.2 Pin Description

Table 5 Pin Definition and Function

Pin No.	Name	Pin Type	Buffer Type	Function
1	VCC			**Power Supply**
2	PON			**Power On/Off**
3	RFIN			**RF Input**
4	SO			**Pre-Filter Output**
5	AI			**LNA Input**
6	RFOUT			**RF Output**
7	GND			**DC and RF ground**

3.3 Application Board

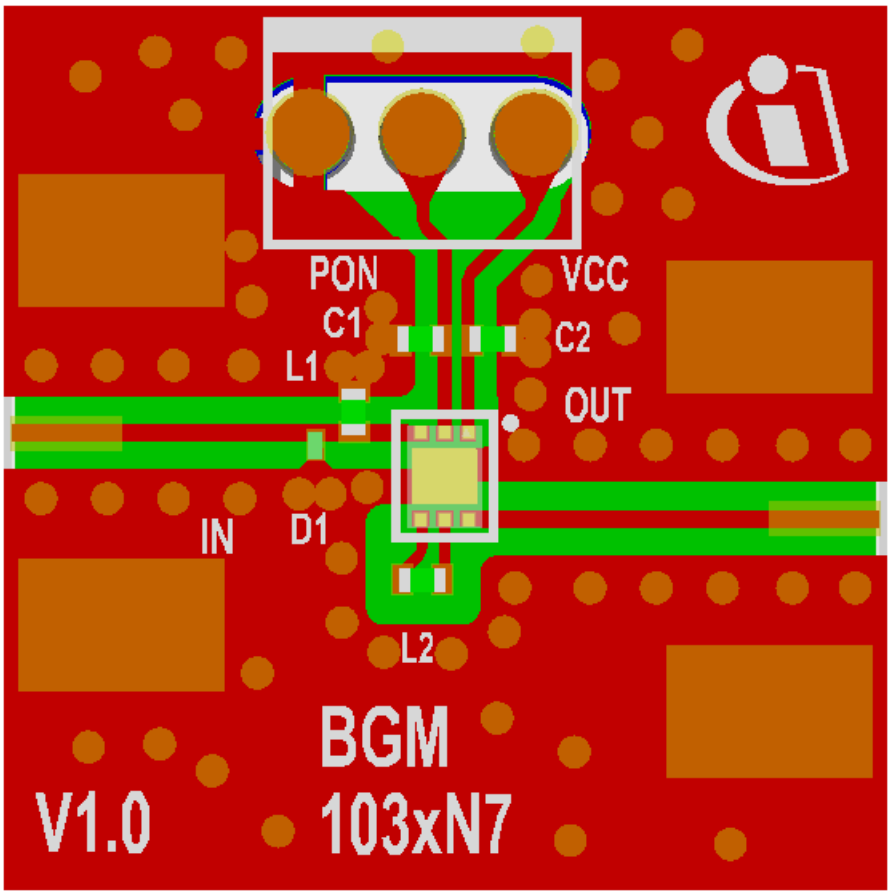

BGM1033_AppBoard_Layout_top.vsd

Figure 3 Top view of Application Board

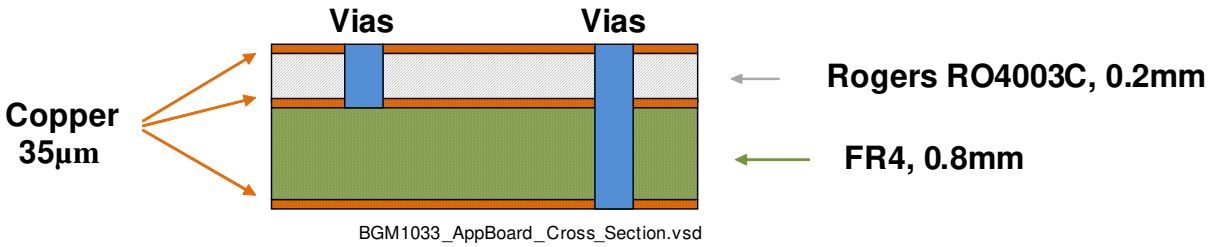

BGM1033_AppBoard_Cross_Section.vsd

Figure 4 Cross-Section view of Application Board

4 Package Information

4.1 Package Footprint

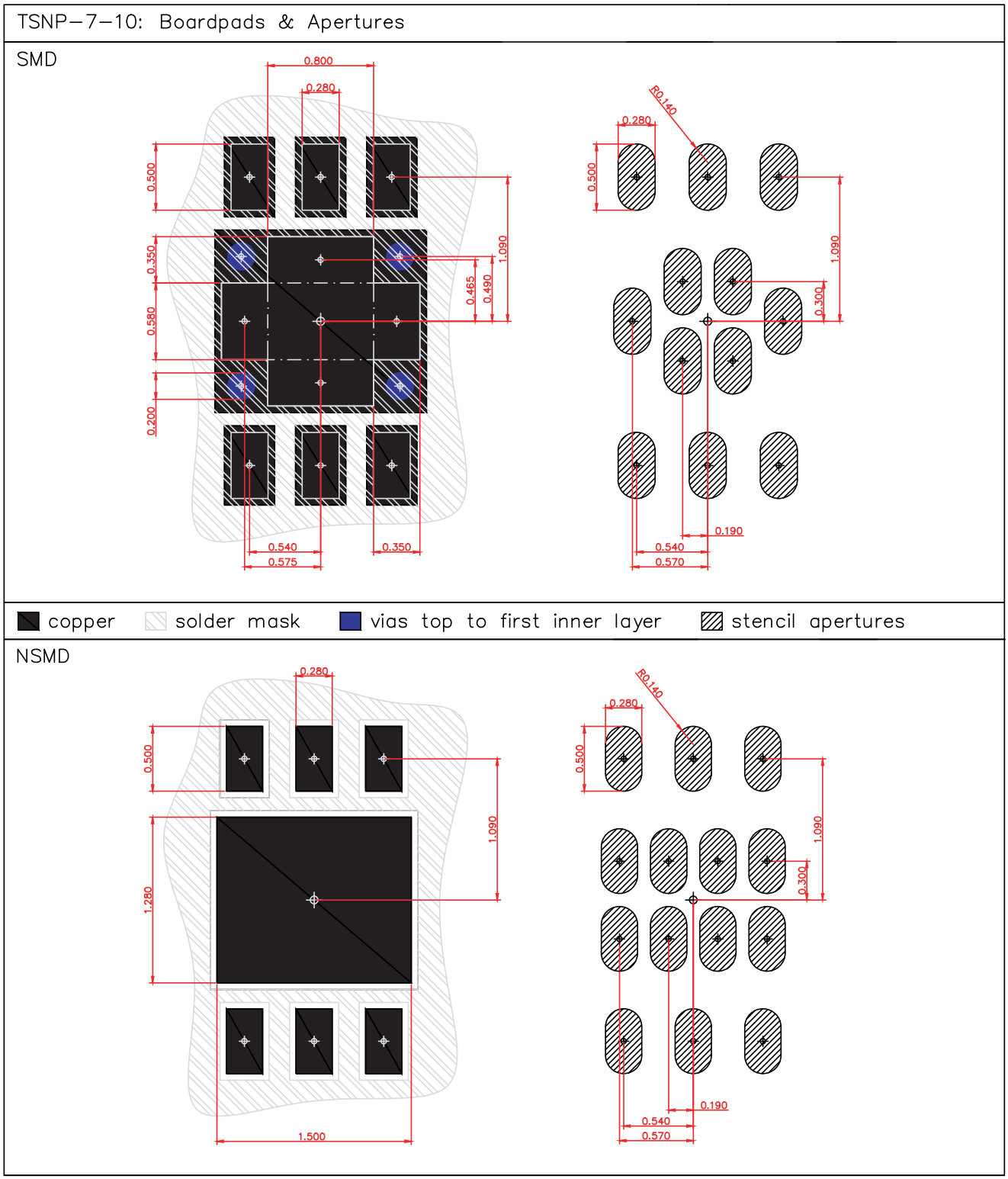

Figure 5 Recommended PCB Footprint for the TSNP-7-10 Package (subject to be changed)

4.2 Package Dimensions

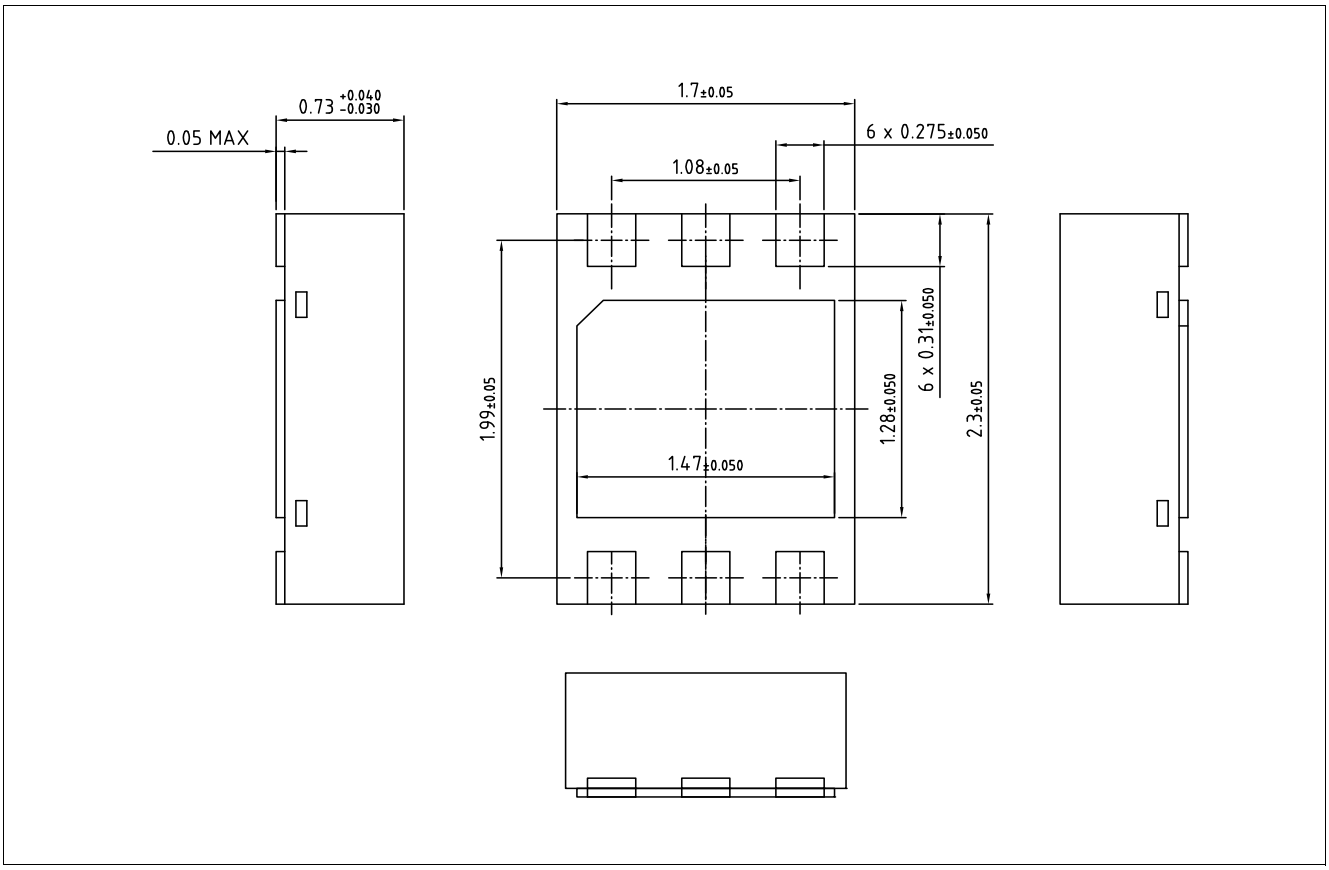

Figure 6 TSNP-7-10 Package Outline (bottom and side views)

4.3 Product Marking Pattern

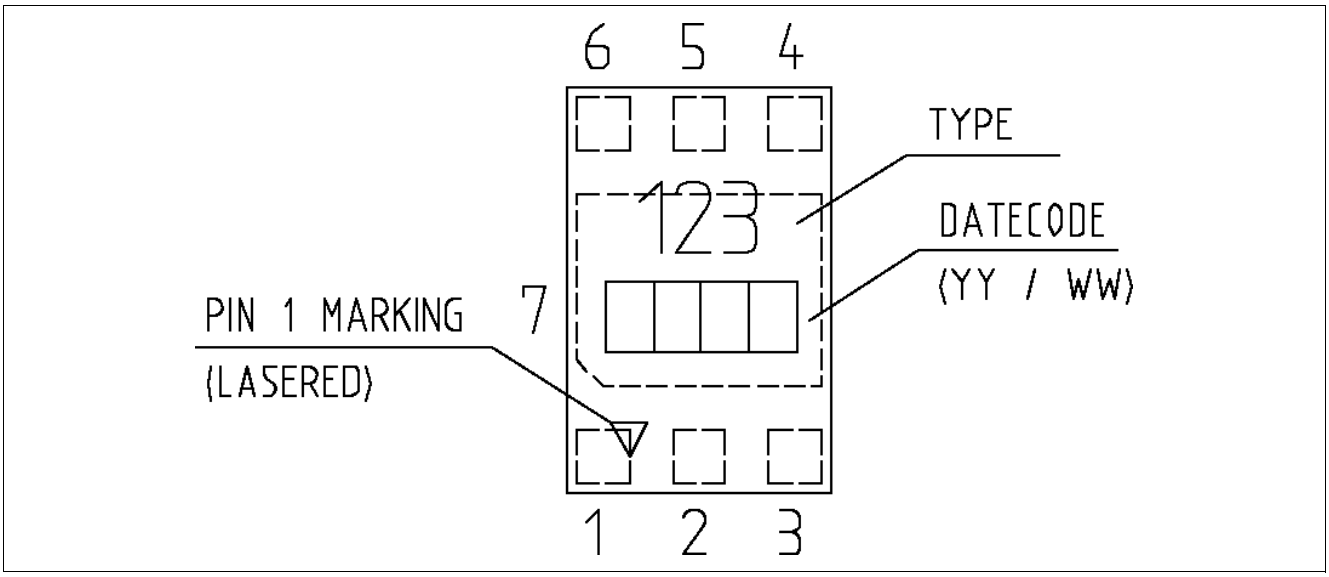

Figure 7 Marking Pattern (top view)

5 Packing Information

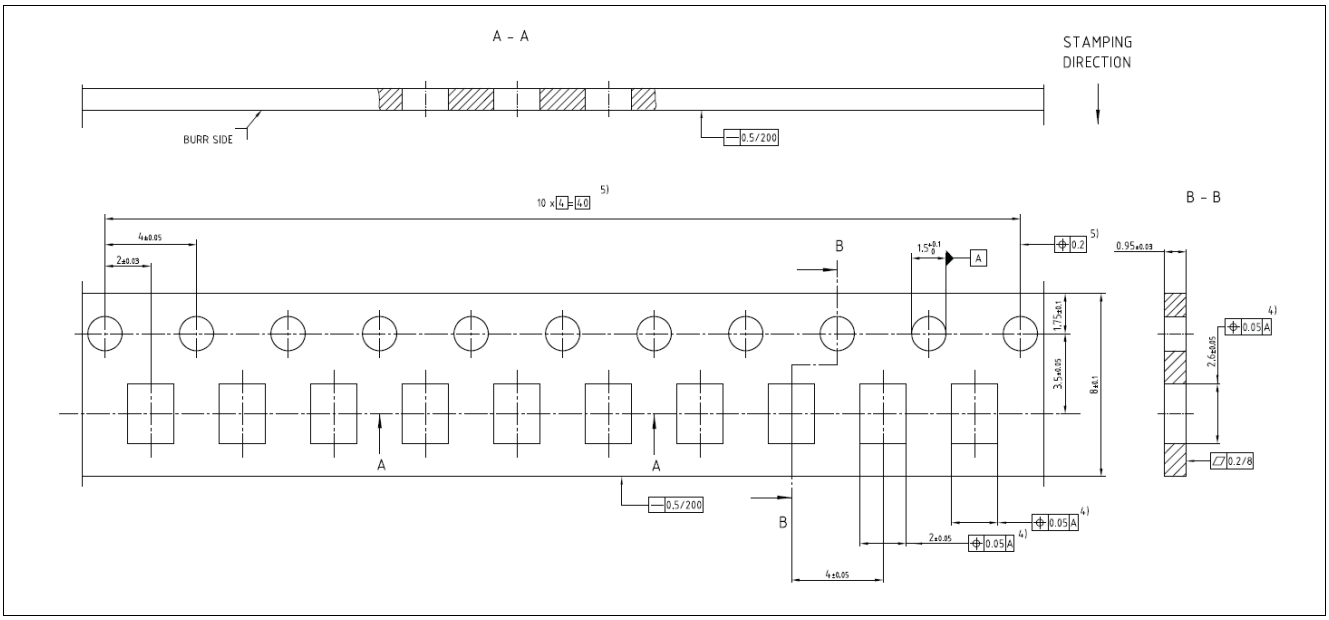

Figure 8 TSNP-7-10 Carrier tape

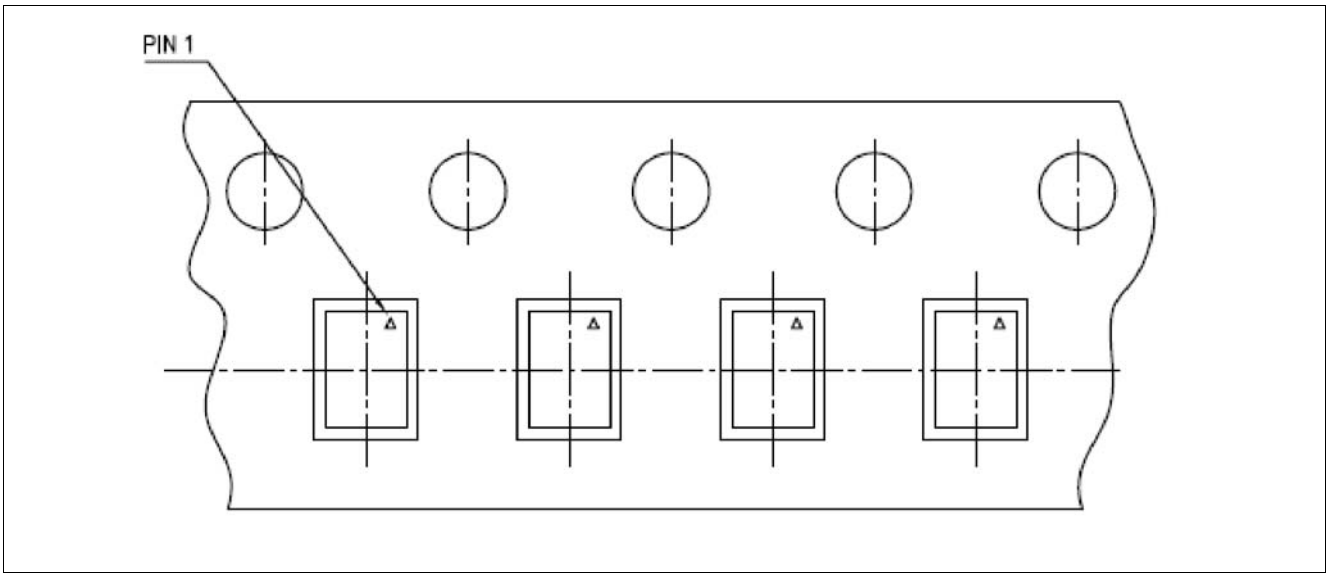

Figure 9 TSNP-7-10 Pin 1 orientation in tape

w w w . i n f i n e o n . c o m

Published by Infineon Technologies AG