Chipsmall Limited consists of a professional team with an average of over 10 year of expertise in the distribution of electronic components. Based in Hongkong, we have already established firm and mutual-benefit business relationships with customers from,Europe,America and south Asia,supplying obsolete and hard-to-find components to meet their specific needs.

With the principle of “Quality Parts,Customers Priority,Honest Operation,and Considerate Service”,our business mainly focus on the distribution of electronic components. Line cards we deal with include Microchip,ALPS,ROHM,Xilinx,Pulse,ON,Everlight and Freescale. Main products comprise IC,Modules,Potentiometer,IC Socket,Relay,Connector.Our parts cover such applications as commercial,industrial, and automotives areas.

We are looking forward to setting up business relationship with you and hope to provide you with the best service and solution. Let us make a better world for our industry!

Contact us

Tel: +86-755-8981 8866 Fax: +86-755-8427 6832
Email & Skype: info@chipsmall.com Web: www.chipsmall.com
Address: A1208, Overseas Decoration Building, #122 Zhenhua RD., Futian, Shenzhen, China

DATA SHEET

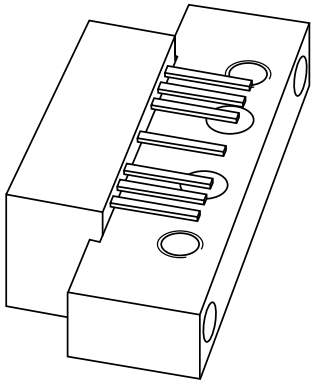

BGY888

860 MHz, 34 dB gain push-pull amplifier

Product specification
Supersedes data of 1999 Mar 30

2001 Oct 25

860 MHz, 34 dB gain push-pull amplifier BGY888

FEATURES

- Excellent linearity
- Extremely low noise
- High gain
- Excellent return loss properties.

APPLICATIONS

- Single module line extender in CATV systems operating over a frequency range of 40 to 860 MHz.

DESCRIPTION

Hybrid high dynamic range amplifier module operating with a voltage supply of 24 V in a SOT115J package. The high gain module consists of two cascaded stages both in cascode configuration.

PINNING SOT115J

PIN	DESCRIPTION
1	input
2, 3	common
5	$+V_B$
7, 8	common
9	output

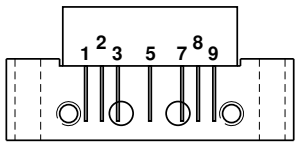

Fig.1 Simplified outline.

QUICK REFERENCE DATA

SYMBOL	PARAMETER	CONDITIONS	MIN.	MAX.	UNIT
G_p	power gain	f = 50 MHz	33.5	34.5	dB
		f = 860 MHz	34	–	dB
I_{tot}	total current consumption (DC)	V_B = 24 V	–	340	mA

LIMITING VALUES

In accordance with the Absolute Maximum Rating System (IEC 60134).

SYMBOL	PARAMETER	MIN.	MAX.	UNIT
V_i	RF input voltage	–	55	dBmV
T_{stg}	storage temperature	–40	+100	°C
T_{mb}	operating mounting base temperature	–20	+100	°C

CHARACTERISTICS

Table 1 Bandwidth 40 to 860 MHz; V_B = 24 V; T_{case} = 30 °C; $Z_S = Z_L$ = 75 Ω

SYMBOL	PARAMETER	CONDITIONS	MIN.	TYP.	MAX.	UNIT
G_p	power gain	f = 50 MHz	33.5	34	34.5	dB
		f = 860 MHz	34	35	–	dB
SL	slope cable equivalent	f = 40 to 860 MHz	0.5	1.1	2.5	dB
FL	flatness of frequency response	f = 40 to 860 MHz	–	±0.2	±0.5	dB
S_{11}	input return losses	f = 40 to 80 MHz	20	25	–	dB
		f = 80 to 160 MHz	18.5	28	–	dB
		f = 160 to 320 MHz	17	28	–	dB
		f = 320 to 640 MHz	15.5	21	–	dB
		f = 640 to 860 MHz	14	18.5	–	dB
S_{22}	output return losses	f = 40 to 80 MHz	20	25.5	–	dB
		f = 80 to 160 MHz	18.5	28.5	–	dB
		f = 160 to 320 MHz	17	26.5	–	dB
		f = 320 to 640 MHz	15.5	20.5	–	dB
		f = 640 to 860 MHz	14	21	–	dB
S_{21}	phase response	f = 50 MHz	135	–	225	deg
CTB	composite triple beat	49 channels flat; V_o = 44 dBmV; measured at 859.25 MHz	–	–63.5	–60	dB
X_{mod}	cross modulation	49 channels flat; V_o = 44 dBmV; measured at 55.25 MHz	–	–63	–59	dB
CSO	composite second order distortion	49 channels flat; V_o = 44 dBmV; measured at 860.5 MHz	–	–64	–55	dB
d_2	second order distortion	note 1	–	–74	–65	dB
V_o	output voltage	d_{im} = –60 dB; note 2	58	60	–	dBmV
F	noise figure	f = 50 MHz	–	4	4.5	dB
		f = 550 MHz	–	–	5	dB
		f = 600 MHz	–	–	5	dB
		f = 650 MHz	–	–	5.5	dB
		f = 750 MHz	–	–	6	dB
		f = 860 MHz	–	5.5	7	dB
I_{tot}	total current consumption (DC)	note 3	–	325	340	mA

Notes

1. f_p = 55.25 MHz; V_p = 44 dBmV;
   f_q = 805.25 MHz; V_q = 44 dBmV;
   measured at $f_p + f_q$ = 860.5 MHz.
2. Measured according to DIN45004B:
   f_p = 851.25 MHz; $V_p = V_o$;
   f_q = 858.25 MHz; $V_q = V_o$–6 dB;
   f_r = 860.25 MHz; $V_r = V_o$ –6 dB;
   measured at $f_p + f_q - f_r$ = 849.25 MHz.
3. The module normally operates at V_B = 24 V, but is able to withstand supply transients up to 30 V.

Table 2 Bandwidth 40 to 860 MHz; V_B = 24 V; T_{case} = 30 °C; $Z_S = Z_L$ = 75 Ω

SYMBOL	PARAMETER	CONDITIONS	MIN.	TYP.	MAX.	UNIT
G_p	power gain	f = 50 MHz	33.5	34	34.5	dB
		f = 860 MHz	34	35	–	dB
SL	slope cable equivalent	f = 40 to 860 MHz	0.5	1.1	2.5	dB
FL	flatness of frequency response	f = 40 to 860 MHz	–	±0.2	±0.5	dB
S_{11}	input return losses	f = 40 to 80 MHz	20	25	–	dB
		f = 80 to 160 MHz	18.5	28	–	dB
		f = 160 to 320 MHz	17	28	–	dB
		f = 320 to 640 MHz	15.5	21	–	dB
		f = 640 to 860 MHz	14	18.5	–	dB
S_{22}	output return losses	f = 40 to 80 MHz	20	25.5	–	dB
		f = 80 to 160 MHz	18.5	28.5	–	dB
		f = 160 to 320 MHz	17	26.5	–	dB
		f = 320 to 640 MHz	15.5	20.5	–	dB
		f = 640 to 860 MHz	14	21	–	dB
S_{21}	phase response	f = 50 MHz	135	–	225	deg
CTB	composite triple beat	129 channels flat; V_o = 44 dBmV; measured at 859.25 MHz	–	−47.5	−46	dB
X_{mod}	cross modulation	129 channels flat; V_o = 44 dBmV; measured at 55.25 MHz	–	−53.5	−50	dB
CSO	composite second order distortion	129 channels flat; V_o = 44 dBmV; measured at 860.5 MHz	–	−56	−48	dB
d_2	second order distortion	note 1	–	−74	−65	dB
V_o	output voltage	d_{im} = −60 dB; note 2	58	60	–	dBmV
F	noise figure	see Table 1	–	–	–	dB
I_{tot}	total current consumption (DC)	note 3	–	325	340	mA

Notes

1. f_p = 55.25 MHz; V_p = 44 dBmV;
   f_q = 805.25 MHz; V_q = 44 dBmV;
   measured at $f_p + f_q$ = 860.5 MHz.
2. Measured according to DIN45004B:
   f_p = 851.25 MHz; $V_p = V_o$;
   f_q = 858.25 MHz; $V_q = V_o$ −6 dB;
   f_r = 860.25 MHz; $V_r = V_o$ −6 dB;
   measured at $f_p + f_q - f_r$ = 849.25 MHz.
3. The module normally operates at V_B = 24 V, but is able to withstand supply transients up to 30 V.

Table 3 Bandwidth 40 to 750 MHz; V_B = 24 V; T_{case} = 30 °C; $Z_S = Z_L$ = 75 Ω

SYMBOL	PARAMETER	CONDITIONS	MIN.	TYP.	MAX.	UNIT
G_p	power gain	f = 50 MHz	33.5	34	34.5	dB
		f = 750 MHz	34	–	–	dB
SL	slope cable equivalent	f = 40 to 750 MHz	0.2	–	2.2	dB
FL	flatness of frequency response	f = 40 to 750 MHz	–	–	±0.45	dB
S_{11}	input return losses	f = 40 to 80 MHz	20	25	–	dB
		f = 80 to 160 MHz	18.5	28	–	dB
		f = 160 to 320 MHz	17	28	–	dB
		f = 320 to 640 MHz	15.5	21	–	dB
		f = 640 to 750 MHz	14	18.5	–	dB
S_{22}	output return losses	f = 40 to 80 MHz	20	25.5	–	dB
		f = 80 to 160 MHz	18.5	28.5	–	dB
		f = 160 to 320 MHz	17	26.5	–	dB
		f = 320 to 640 MHz	15.5	20.5	–	dB
		f = 640 to 750 MHz	14	21	–	dB
S_{21}	phase response	f = 50 MHz	135	–	225	deg
CTB	composite triple beat	110 channels flat; V_o = 44 dBmV; measured at 745.25 MHz	–	–52.5	–50	dB
X_{mod}	cross modulation	110 channels flat; V_o = 44 dBmV; measured at 55.25 MHz	–	–55.5	–51	dB
CSO	composite second order distortion	110 channels flat; V_o = 44 dBmV; measured at 746.5 MHz	–	–61.5	–53	dB
d_2	second order distortion	note 1	–	–	–65	dB
V_o	output voltage	d_{im} = –60 dB; note 2	59	–	–	dBmV
F	noise figure	see Table 1	–	–	–	dB
I_{tot}	total current consumption (DC)	note 3	–	325	340	mA

Notes

1. f_p = 55.25 MHz; V_p = 44 dBmV;
   f_q = 691.25 MHz; V_q = 44 dBmV;
   measured at $f_p + f_q$ = 746.5 MHz.
2. Measured according to DIN45004B:
   f_p = 740.25 MHz; $V_p = V_o$;
   f_q = 747.25 MHz; $V_q = V_o$–6 dB;
   f_r = 749.25 MHz; $V_r = V_o$ –6 dB;
   measured at $f_p + f_q - f_r$ = 738.25 MHz.
3. The module normally operates at V_B = 24 V, but is able to withstand supply transients up to 30 V.

Table 4 Bandwidth 40 to 600 MHz; V_B = 24 V; T_{case} = 30 °C; $Z_S = Z_L$ = 75 Ω

SYMBOL	PARAMETER	CONDITIONS	MIN.	TYP.	MAX.	UNIT
G_p	power gain	f = 50 MHz	33.5	34	34.5	dB
		f = 600 MHz	34	–	–	dB
SL	slope cable equivalent	f = 40 to 600 MHz	0	–	2	dB
FL	flatness of frequency response	f = 40 to 600 MHz	–	–	±0.35	dB
S_{11}	input return losses	f = 40 to 80 MHz	20	25	–	dB
		f = 80 to 160 MHz	18.5	28	–	dB
		f = 160 to 320 MHz	17	28	–	dB
		f = 320 to 600 MHz	16	21	–	dB
S_{22}	output return losses	f = 40 to 80 MHz	20	25.5	–	dB
		f = 80 to 160 MHz	18.5	28.5	–	dB
		f = 160 to 320 MHz	17	26.5	–	dB
		f = 320 to 600 MHz	16	20.5	–	dB
S_{21}	phase response	f = 50MHz	135	–	225	deg
CTB	composite triple beat	85 channels flat; V_o = 44 dBmV; measured at 595.25 MHz	–	–56.5	–55	dB
X_{mod}	cross modulation	85 channels flat; V_o = 44 dBmV; measured at 55.25 MHz	–	–58	–54	dB
CSO	composite second order distortion	85 channels flat; V_o = 44 dBmV; measured at 596.5 MHz	–	–69.5	–56	dB
d_2	second order distortion	note 1	–	–	–68	dB
V_o	output voltage	d_{im} = –60 dB; note 2	61	–	–	dBmV
F	noise figure (DC)	see Table 1	–	–	–	dB
I_{tot}	total current consumption	note 3	–	325	340	mA

Notes

1. f_p = 55.25 MHz; V_p = 44 dBmV;
   f_q = 541.25 MHz; V_q = 44 dBmV;
   measured at $f_p + f_q$ = 596.5 MHz.
2. Measured according to DIN45004B:
   f_p = 590.25 MHz; $V_p = V_o$;
   f_q = 597.25 MHz; $V_q = V_o$ –6 dB;
   f_r = 599.25 MHz; $V_r = V_o$ –6 dB;
   measured at $f_p + f_q - f_r$ = 588.25 MHz.
3. The module normally operates at V_B = 24 V, but is able to withstand supply transients up to 30 V.

PACKAGE OUTLINE

Rectangular single-ended package; aluminium flange; 2 vertical mounting holes; 2 x 6-32 UNC and 2 extra horizontal mounting holes; 7 gold-plated in-line leads **SOT115J**

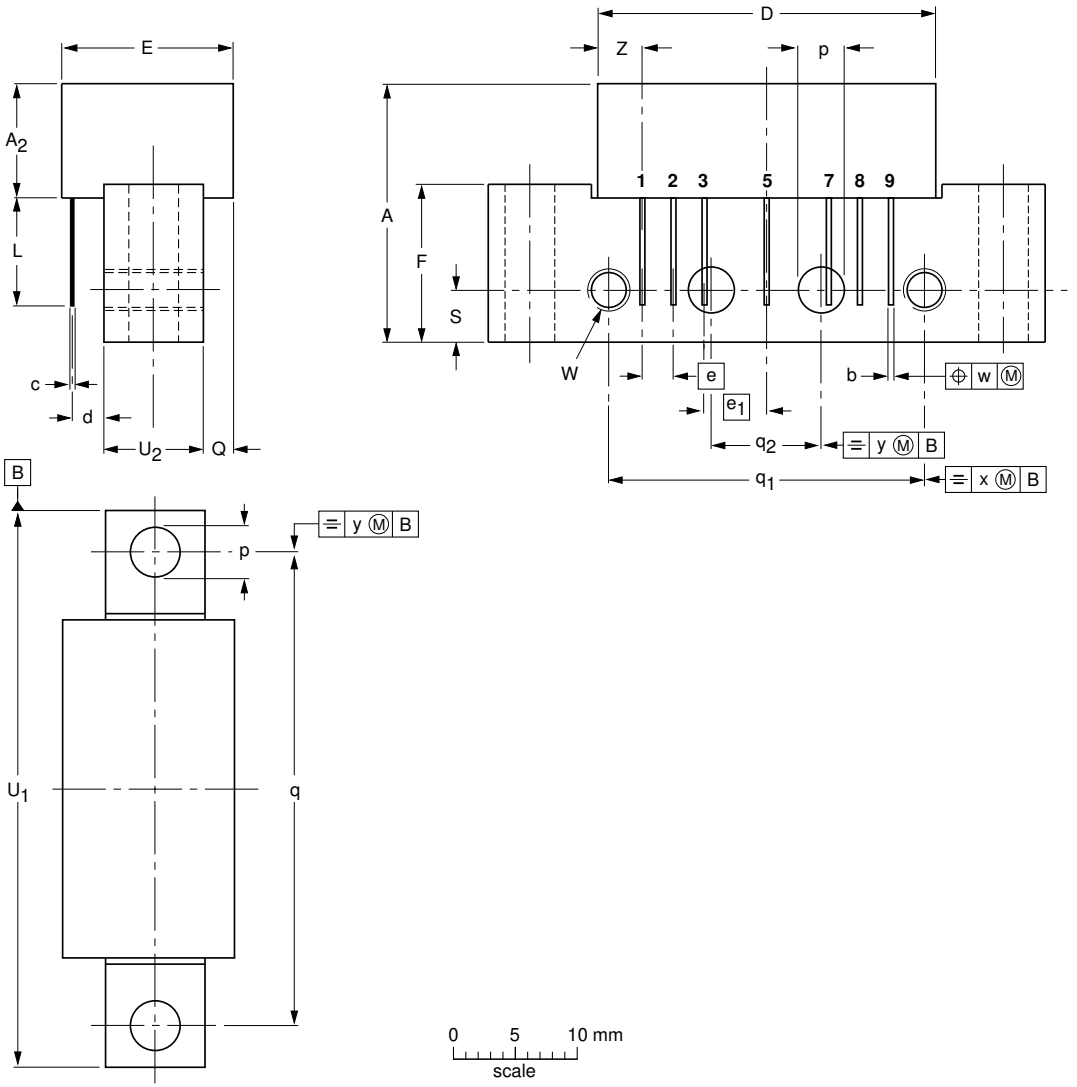

DIMENSIONS (mm are the original dimensions)

UNIT	A max.	A_2 max.	b	c	D max.	d	E max.	e	e_1	F	L min.	p	Q max.	q	q_1	q_2	S	U_1	U_2	W	w	x	y	Z max.
mm	20.8	9.5	0.51 0.38	0.25	27.2	2.04 2.54	13.75	2.54	5.08	12.7	8.8	4.15 3.85	2.4	38.1	25.4	10.2	4.2	44.75 44.25	8.2 7.8	6-32 UNC	0.25	0.7	0.1	3.8

OUTLINE VERSION	REFERENCES				EUROPEAN PROJECTION	ISSUE DATE
	IEC	JEDEC	JEITA			
SOT115J						~~04-02-04~~ 10-06-18

DATA SHEET STATUS

DOCUMENT STATUS[1]	PRODUCT STATUS[2]	DEFINITION
Objective data sheet	Development	This document contains data from the objective specification for product development.
Preliminary data sheet	Qualification	This document contains data from the preliminary specification.
Product data sheet	Production	This document contains the product specification.

Notes

1. Please consult the most recently issued document before initiating or completing a design.
2. The product status of device(s) described in this document may have changed since this document was published and may differ in case of multiple devices. The latest product status information is available on the Internet at URL http://www.nxp.com.

DEFINITIONS

Product specification — The information and data provided in a Product data sheet shall define the specification of the product as agreed between NXP Semiconductors and its customer, unless NXP Semiconductors and customer have explicitly agreed otherwise in writing. In no event however, shall an agreement be valid in which the NXP Semiconductors product is deemed to offer functions and qualities beyond those described in the Product data sheet.

DISCLAIMERS

Limited warranty and liability — Information in this document is believed to be accurate and reliable. However, NXP Semiconductors does not give any representations or warranties, expressed or implied, as to the accuracy or completeness of such information and shall have no liability for the consequences of use of such information.

In no event shall NXP Semiconductors be liable for any indirect, incidental, punitive, special or consequential damages (including - without limitation - lost profits, lost savings, business interruption, costs related to the removal or replacement of any products or rework charges) whether or not such damages are based on tort (including negligence), warranty, breach of contract or any other legal theory.

Notwithstanding any damages that customer might incur for any reason whatsoever, NXP Semiconductors' aggregate and cumulative liability towards customer for the products described herein shall be limited in accordance with the *Terms and conditions of commercial sale* of NXP Semiconductors.

Right to make changes — NXP Semiconductors reserves the right to make changes to information published in this document, including without limitation specifications and product descriptions, at any time and without notice. This document supersedes and replaces all information supplied prior to the publication hereof.

Suitability for use — NXP Semiconductors products are not designed, authorized or warranted to be suitable for use in life support, life-critical or safety-critical systems or equipment, nor in applications where failure or malfunction of an NXP Semiconductors product can reasonably be expected to result in personal injury, death or severe property or environmental damage. NXP Semiconductors accepts no liability for inclusion and/or use of NXP Semiconductors products in such equipment or applications and therefore such inclusion and/or use is at the customer's own risk.

Applications — Applications that are described herein for any of these products are for illustrative purposes only. NXP Semiconductors makes no representation or warranty that such applications will be suitable for the specified use without further testing or modification.

Customers are responsible for the design and operation of their applications and products using NXP Semiconductors products, and NXP Semiconductors accepts no liability for any assistance with applications or customer product design. It is customer's sole responsibility to determine whether the NXP Semiconductors product is suitable and fit for the customer's applications and products planned, as well as for the planned application and use of customer's third party customer(s). Customers should provide appropriate design and operating safeguards to minimize the risks associated with their applications and products.

NXP Semiconductors does not accept any liability related to any default, damage, costs or problem which is based on any weakness or default in the customer's applications or products, or the application or use by customer's third party customer(s). Customer is responsible for doing all necessary testing for the customer's applications and products using NXP Semiconductors products in order to avoid a default of the applications and the products or of the application or use by customer's third party customer(s). NXP does not accept any liability in this respect.

Limiting values — Stress above one or more limiting values (as defined in the Absolute Maximum Ratings System of IEC 60134) will cause permanent damage to the device. Limiting values are stress ratings only and (proper) operation of the device at these or any other conditions above those given in the Recommended operating conditions section (if present) or the Characteristics sections of this document is not warranted. Constant or repeated exposure to limiting values will permanently and irreversibly affect the quality and reliability of the device.

Terms and conditions of commercial sale — NXP Semiconductors products are sold subject to the general terms and conditions of commercial sale, as published at http://www.nxp.com/profile/terms, unless otherwise agreed in a valid written individual agreement. In case an individual agreement is concluded only the terms and conditions of the respective agreement shall apply. NXP Semiconductors hereby expressly objects to applying the customer's general terms and conditions with regard to the purchase of NXP Semiconductors products by customer.

No offer to sell or license — Nothing in this document may be interpreted or construed as an offer to sell products that is open for acceptance or the grant, conveyance or implication of any license under any copyrights, patents or other industrial or intellectual property rights.

Export control — This document as well as the item(s) described herein may be subject to export control regulations. Export might require a prior authorization from national authorities.

Quick reference data — The Quick reference data is an extract of the product data given in the Limiting values and Characteristics sections of this document, and as such is not complete, exhaustive or legally binding.

Non-automotive qualified products — Unless this data sheet expressly states that this specific NXP Semiconductors product is automotive qualified, the product is not suitable for automotive use. It is neither qualified nor tested in accordance with automotive testing or application requirements. NXP Semiconductors accepts no liability for inclusion and/or use of non-automotive qualified products in automotive equipment or applications.

In the event that customer uses the product for design-in and use in automotive applications to automotive specifications and standards, customer (a) shall use the product without NXP Semiconductors' warranty of the product for such automotive applications, use and specifications, and (b) whenever customer uses the product for automotive applications beyond NXP Semiconductors' specifications such use shall be solely at customer's own risk, and (c) customer fully indemnifies NXP Semiconductors for any liability, damages or failed product claims resulting from customer design and use of the product for automotive applications beyond NXP Semiconductors' standard warranty and NXP Semiconductors' product specifications.

NXP Semiconductors

provides High Performance Mixed Signal and Standard Product solutions that leverage its leading RF, Analog, Power Management, Interface, Security and Digital Processing expertise

Customer notification

This data sheet was changed to reflect the new company name NXP Semiconductors, including new legal definitions and disclaimers. No changes were made to the technical content, except for package outline drawings which were updated to the latest version.

Contact information

For additional information please visit: **http://www.nxp.com**
For sales offices addresses send e-mail to: **salesaddresses@nxp.com**

Printed in The Netherlands R77/05/pp10 Date of release: 2001 Oct 25