Chipsmall Limited consists of a professional team with an average of over 10 year of expertise in the distribution of electronic components. Based in Hongkong, we have already established firm and mutual-benefit business relationships with customers from,Europe,America and south Asia,supplying obsolete and hard-to-find components to meet their specific needs.

With the principle of “Quality Parts,Customers Priority,Honest Operation,and Considerate Service”,our business mainly focus on the distribution of electronic components. Line cards we deal with include Microchip,ALPS,ROHM,Xilinx,Pulse,ON,Everlight and Freescale. Main products comprise IC,Modules,Potentiometer,IC Socket,Relay,Connector.Our parts cover such applications as commercial,industrial, and automotives areas.

We are looking forward to setting up business relationship with you and hope to provide you with the best service and solution. Let us make a better world for our industry!

Contact us

Tel: +86-755-8981 8866 Fax: +86-755-8427 6832
Email & Skype: info@chipsmall.com Web: www.chipsmall.com
Address: A1208, Overseas Decoration Building, #122 Zhenhua RD., Futian, Shenzhen, China

Date	SYM	REVISION RECORD	AUTH	DR.	CK.
02/15/13	A	ADDED "ROHS COMPLIANT" AND MOUNTING NOTES	T.B.	B.S.	
02/22/13	B	UPDATED TO "ROHS 2 COMPLIANT"	T.B.	B.S.	

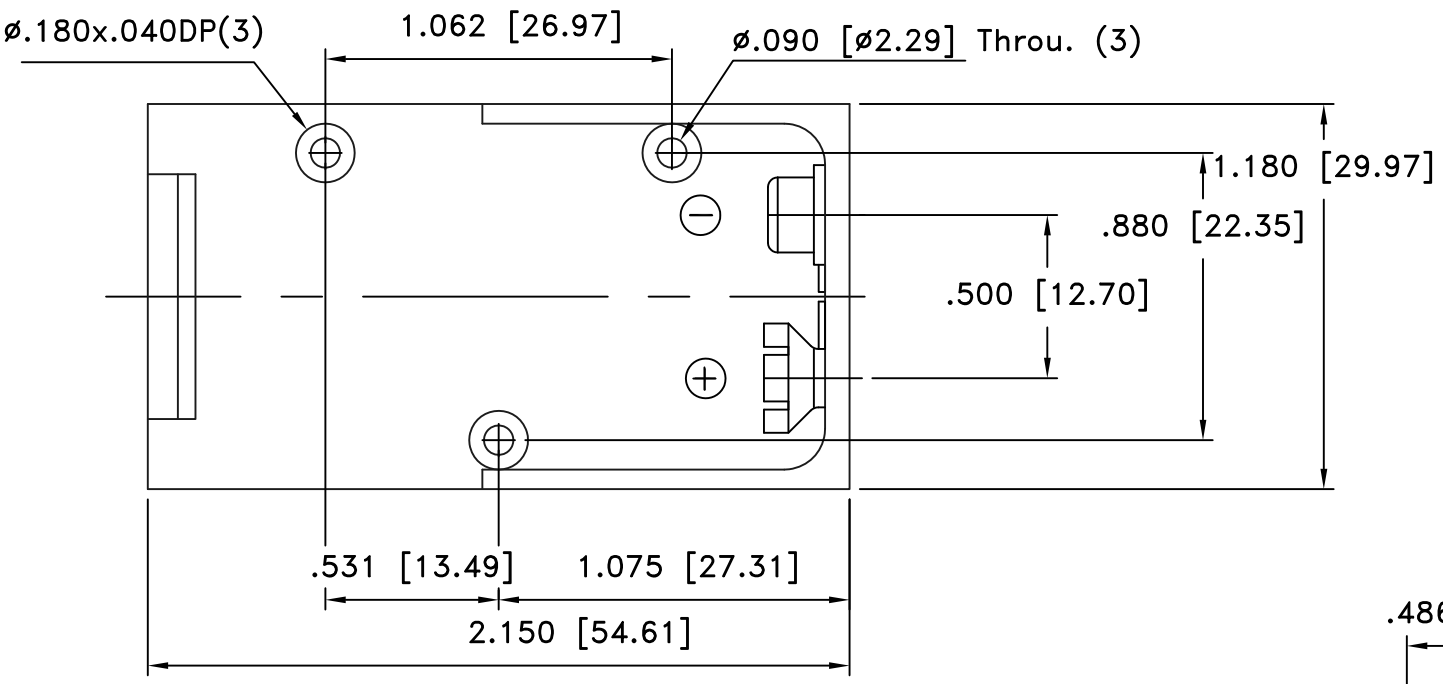

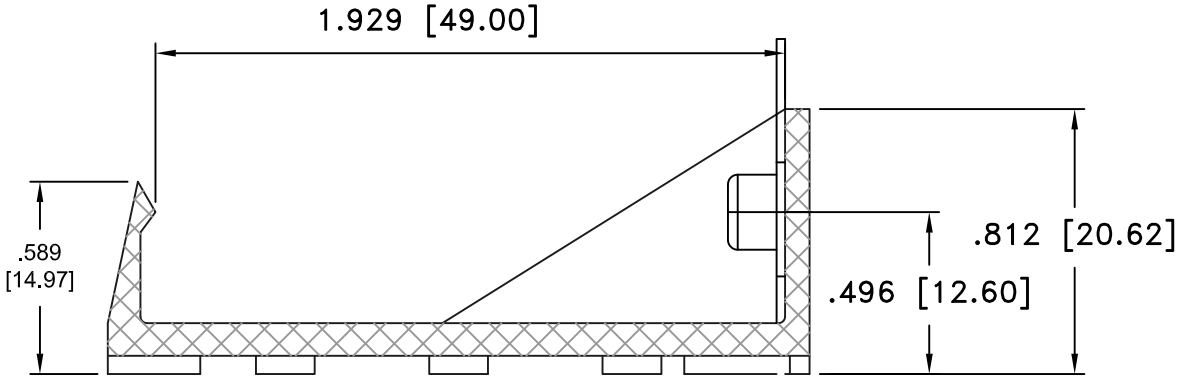

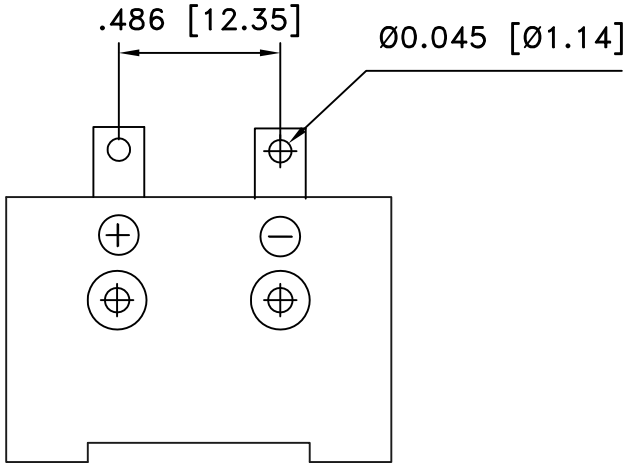

NOTE:
ROHS 2 COMPLIANT

MOUNTING INSTRUCTION:
USE 2-56 MACHINE SCREWS OR EYELETS 0.089" OD BY 0.15" FLANGE STIMPSON GS-3 SERIES OR EQUIVALENT. ALSO ADHESIVES AND DOUBLE SIDED TAPES WORK WELL.

PART	DESCRIPTION	MATERIAL
WASHER	INSULATOR	RUBBER
HOLDER	HOLDER UL94V-0, FILE No. E56070 (S)	HIGH IMPACT ABS BLACK, UL94V-0
CONTACTS	BRASS SNAPS	NICKEL PLATED BRASS

Tolerance (Except as noted)
decimal ±.020 (.5)
Fractional ± .030 (.8)
Angular ± 3°

Memory Protection Devices, Inc
200 Broad Hollow Road, Farmingdale, New York 11735

Scale 2=1
Drawn By T.S.
Approved By T.B.

Title BH9VL ASSEMBLY
Date 02/22/13
Drawing Number BH9VL