Chipsmall Limited consists of a professional team with an average of over 10 year of expertise in the distribution of electronic components. Based in Hongkong, we have already established firm and mutual-benefit business relationships with customers from,Europe,America and south Asia,supplying obsolete and hard-to-find components to meet their specific needs.

With the principle of “Quality Parts,Customers Priority,Honest Operation,and Considerate Service”,our business mainly focus on the distribution of electronic components. Line cards we deal with include Microchip,ALPS,ROHM,Xilinx,Pulse,ON,Everlight and Freescale. Main products comprise IC,Modules,Potentiometer,IC Socket,Relay,Connector.Our parts cover such applications as commercial,industrial, and automotives areas.

We are looking forward to setting up business relationship with you and hope to provide you with the best service and solution. Let us make a better world for our industry!

Contact us

Tel: +86-755-8981 8866 Fax: +86-755-8427 6832
Email & Skype: info@chipsmall.com Web: www.chipsmall.com
Address: A1208, Overseas Decoration Building, #122 Zhenhua RD., Futian, Shenzhen, China

Apr.1.2017 Copyright 2017 HIROSE ELECTRIC CO., LTD. All Rights Reserved.

	COUNT	DESCRIPTION OF REVISIONS	BY	CHKD	DATE		COUNT	DESCRIPTION OF REVISIONS	BY	CHKD	DATE
△					. .	△					. .
△					. .	△					. .
△					. .	△					. .

RECOMMENDED PC BOARD LAYOUT

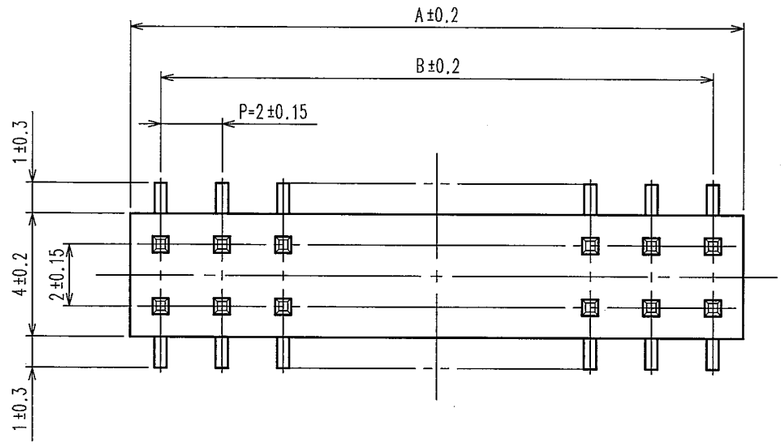

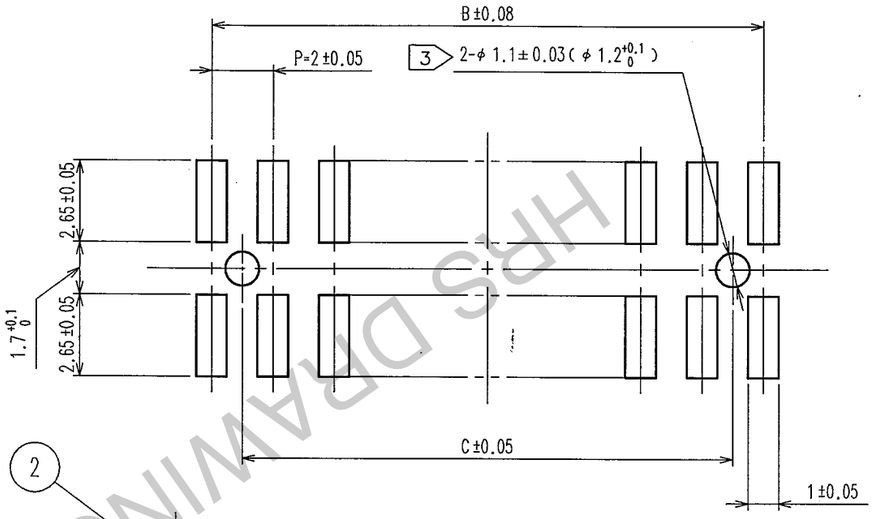

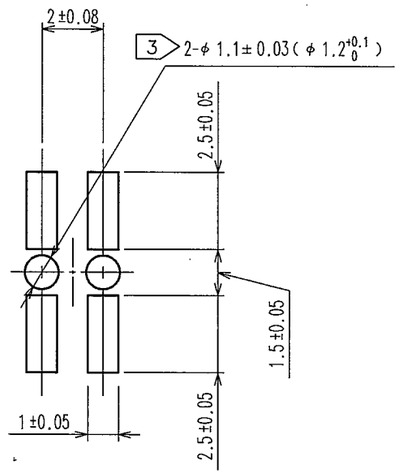

(IN CASE OF 4 CONTACTS)

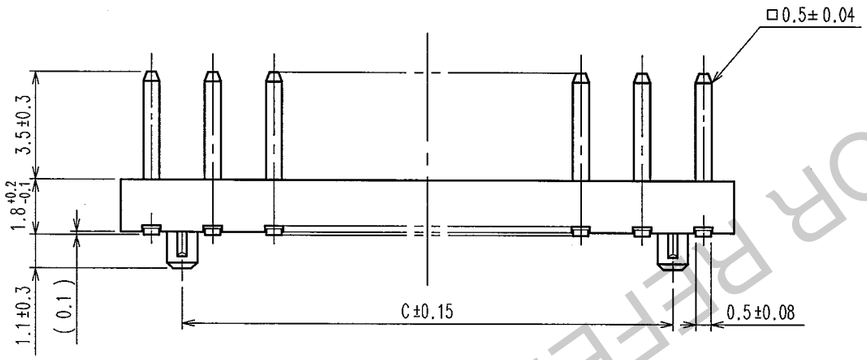

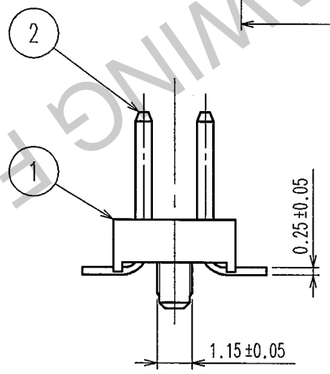

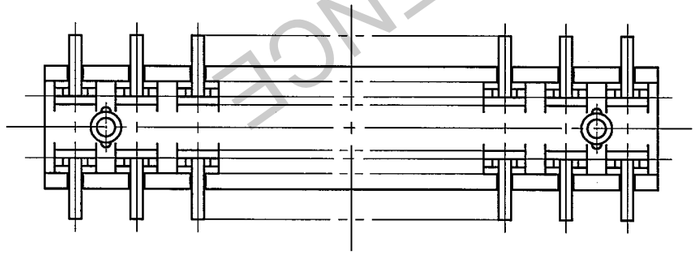

PART No.	CODE No.	4	A	B	C
A3A- 4PA-2SV(71)	CL621-1040-0-71	4	4	2	2
A3A- 6PA-2SV(71)	CL621-1041-3-71	6	6	4	2
A3A- 8PA-2SV(71)	CL621-1042-6-71	8	8	6	4
A3A-10PA-2SV(71)	CL621-1043-9-71	10	10	8	6
A3A-12PA-2SV(71)	CL621-1044-1-71	12	12	10	8
A3A-14PA-2SV(71)	CL621-1045-4-71	14	14	12	10
A3A-16PA-2SV(71)	CL621-1046-7-71	16	16	14	12
A3A-20PA-2SV(71)	CL621-1048-2-71	20	20	18	16
A3A-24PA-2SV(71)	CL621-1050-4-71	24	24	22	20
A3A-28PA-2SV(71)	CL621-1052-0-71	28	28	26	24
A3A-32PA-2SV(71)	CL621-1054-5-71	32	32	30	28
A3A-44PA-2SV(71)	CL621-1055-8-71	44	44	42	40
A3A-50PA-2SV(71)	CL621-1056-0-71	50	50	48	46

NO.	MATERIAL	FINISH, REMARKS	NO.	MATERIAL	FINISH, REMARKS
1	POLYPHENYLENE SULFIDE	LIGHT BROWN / UL94 V-0	2	BRASS	CONTACT AREA:GOLD 0.2μm min. MOUNTING AREA:GOLD FLASH UNDER PLATING:NICKEL 2μm min.

CODE NO.(OLD)	DRAWN	DESIGNED	CHECKED	APPROVED	RELEASED
	T.NODA '05.03.30	K.Doi '05.03.30	K.Ozawa '05.03.30	H.Okawa '05.03.30	

SCALE	DRAWING NO.	PART NO.
FREE	EDC3-082601-21	A3A-*PA-2SV(71)
UNITS mm	HRS HIROSE ELECTRIC CO., LTD	CODE NO. CL621 1/1

注 1 LEAD CO-PLANARITY SHALL BE 0.15 MAX.
2 THE DIMENSIONS IN PARENTHESES ARE FOR REFERNCE.
3 IN CASE OF THE AUTOMATED MOUNTING, RECOMMENDED HOLE DIAMETER OF BOSS SHALL BE $1.2^{+0.1}_{0}$.
4 NUMBER OF CONTACT.

TO
PCK

HRS DRAWING FOR REFERENCE

FORM NO.229