Chipsmall Limited consists of a professional team with an average of over 10 year of expertise in the distribution of electronic components. Based in Hongkong, we have already established firm and mutual-benefit business relationships with customers from,Europe,America and south Asia,supplying obsolete and hard-to-find components to meet their specific needs.

With the principle of “Quality Parts,Customers Priority,Honest Operation,and Considerate Service”,our business mainly focus on the distribution of electronic components. Line cards we deal with include Microchip,ALPS,ROHM,Xilinx,Pulse,ON,Everlight and Freescale. Main products comprise IC,Modules,Potentiometer,IC Socket,Relay,Connector.Our parts cover such applications as commercial,industrial, and automotives areas.

We are looking forward to setting up business relationship with you and hope to provide you with the best service and solution. Let us make a better world for our industry!

Contact us

Tel: +86-755-8981 8866 Fax: +86-755-8427 6832
Email & Skype: info@chipsmall.com Web: www.chipsmall.com
Address: A1208, Overseas Decoration Building, #122 Zhenhua RD., Futian, Shenzhen, China

DATA SHEET

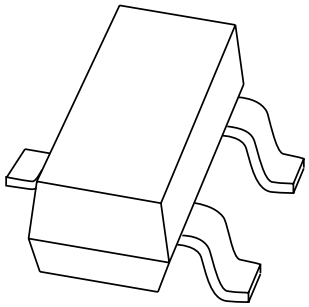

BSR12
PNP switching transistor

Product specification

1999 Jul 23

Philips
Semiconductors

PHILIPS

PNP switching transistor BSR12

FEATURES

- Low current (max. 100 mA)
- Low voltage (max. 15 V).

APPLICATIONS

- High-speed, saturated switching applications for industrial service in thick and thin-film circuits.

DESCRIPTION

PNP switching transistor in a SOT23 plastic package.

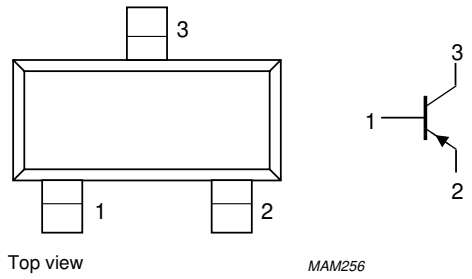

Fig.1 Simplified outline (SOT23) and symbol.

PINNING

PIN	DESCRIPTION
1	base
2	emitter
3	collector

MARKING

TYPE NUMBER	MARKING CODE
BSR12	B5p

QUICK REFERENCE DATA

SYMBOL	PARAMETER	CONDITIONS	MIN.	MAX.	UNIT
V_{CBO}	collector-base voltage	open emitter	–	–15	V
V_{CEO}	collector-emitter voltage	open base	–	–15	V
I_{CM}	peak collector current		–	–200	mA
P_{tot}	total power dissipation	$T_{amb} \leq 25$ °C	–	250	mW
T_j	junction temperature		–	150	°C
h_{FE}	DC current gain	$I_C = -10$ mA; $V_{CE} = -1$ V	30	–	
		$I_C = -50$ mA; $V_{CE} = -1$ V	30	120	
f_T	transition frequency	f = 500 MHz; $I_C = -50$ mA; $V_{CE} = -10$ V	1.5	–	GHz
t_{off}	turn-off time	$I_{Con} = -30$ mA; $I_{Bon} = -3$ mA; $I_{Boff} = 3$mA	–	30	ns

LIMITING VALUES

In accordance with the Absolute Maximum Rating System (IEC 134).

SYMBOL	PARAMETER	CONDITIONS	MIN.	MAX.	UNIT
V_{CBO}	collector-base voltage	open emitter	–	–15	V
V_{CEO}	collector-emitter voltage	open base	–	–15	V
V_{EBO}	emitter-base voltage	open collector	–	–3	V
I_C	collector current (DC)		–	–100	mA
I_{CM}	peak collector current		–	–200	mA
P_{tot}	total power dissipation	$T_{amb} \leq 25$ °C	–	250	mW
T_{stg}	storage temperature		–65	+150	°C
T_j	junction temperature		–	150	°C

THERMAL CHARACTERISTICS

SYMBOL	PARAMETER	CONDITIONS	VALUE	UNIT
$R_{th\ j\text{-}a}$	thermal resistance from junction to ambient	note 1	500	K/W

Note

1. Transistor mounted on a ceramic substrate $8 \times 10 \times 0.7$ mm.

CHARACTERISTICS

T_{amb} = 25 °C unless otherwise specified.

SYMBOL	PARAMETER	CONDITIONS	MIN.	TYP.	MAX.	UNIT
I_{CBO}	collector cut-off current	$I_E = 0$; $V_{CB} = -10$ V	–	–	–50	nA
		$I_E = 0$; $V_{CB} = -10$ V; $T_{amb} = 125$ °C	–	–	–5	μA
I_{CES}	collector cut-off current	$V_{BE} = 0$; $V_{CE} = -10$ V	–	–	–50	nA
$V_{(BR)CBO}$	breakdown voltage	$I_E = 0$; $I_C = -10$ μA	–15	–	–	V
$V_{(BR)CES}$	breakdown voltage	$V_{BE} = 0$; $I_C = -10$ μA	–15	–	–	V
$V_{(BR)EBO}$	breakdown voltage	$I_C = 0$; $I_E = -100$ μA	–3	–	–	V
$V_{CEOsust}$	collector-emitter sustaining voltage	$I_B = 0$; $I_C = -10$ mA	–15	–	–	V
V_{CEsat}	collector-emitter saturation voltage	$I_C = -10$ mA; $I_B = -1$ mA; note 1	–	–	–130	mV
		$I_C = -50$ mA; $I_B = -5$ mA; note 1	–	–180	–270	mV
		$I_C = -100$ mA; $I_B = -10$ mA; note 1	–	–	–450	mV
V_{BEsat}	base-emitter saturation voltage	$I_C = -10$ mA; $I_B = -1$ mA; note 1	–725	–	–920	mV
		$I_C = -50$ mA; $I_B = -5$ mA; note 1	–800	–	–1150	mV
		$I_C = -100$ mA; $I_B = -10$ mA; note 1	–900	–	–1500	mV
h_{FE}	DC current gain	$I_C = -1$ mA; $V_{CE} = -1$ V; note 1	30	–	–	
		$I_C = -10$ mA; $V_{CE} = -1$ V; note 1	30	–	–	
		$I_C = -50$ mA; $V_{CE} = -1$ V; note 1	30	–	120	
		$I_C = -50$ mA; $V_{CE} = -1$ V; $T_{amb} = 55$ °C; note 1	30	–	–	
		$I_C = -100$ mA; $V_{CE} = -1$ V; note 1	20	–	–	
f_T	transition frequency	IC = –50 mA; $V_{CE} = -10$ V; f = 500 MHz	1.5	–	–	GHz
C_c	collector capacitance	$I_E = I_e = 0$; $V_{CB} = -5$ V	–	–	4.5	pF
C_e	emitter capacitance	$I_C = I_c = 0$; $V_{EB} = -0.5$ V	–	–	6	pF
Switching time (see Fig.2)						
t_{on}	turn-on time	$V_i = -6.85$ V; $V_{BB} = 0$ V; $I_{Con} = -30$ mA; $I_{Bon} = -3.0$ mA	–	–	20	ns
t_{off}	turn-off time	$V_i = 11.7$ V; $V_{BB} = -9.85$ V; $I_{Con} = -30$ mA; $I_{Bon} = -3$ mA; $I_{Boff} = 3$ mA	–	–	30	ns

Note

1. Pulse test: $t_p = 300$ μs; $\delta = 0.01$.

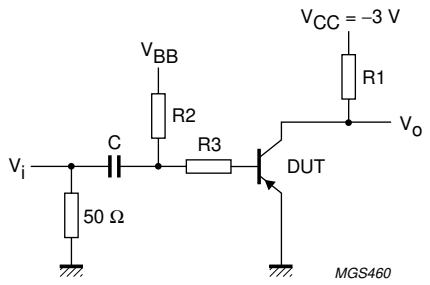

R1 = 94 Ω; R2 = 1 kΩ; R3 = 2 kΩ; C = 0.1 μF.
Pulse generator: Pulse duration t_p = 400 ns. Rise time t_r < 1 ns. Output impedance Z_O = 50 Ω.
Sampling scope: Rise time t_r < 1 ns. Input impedance Z_i = 100 kΩ.

Fig.2 Test circuit for switching times.

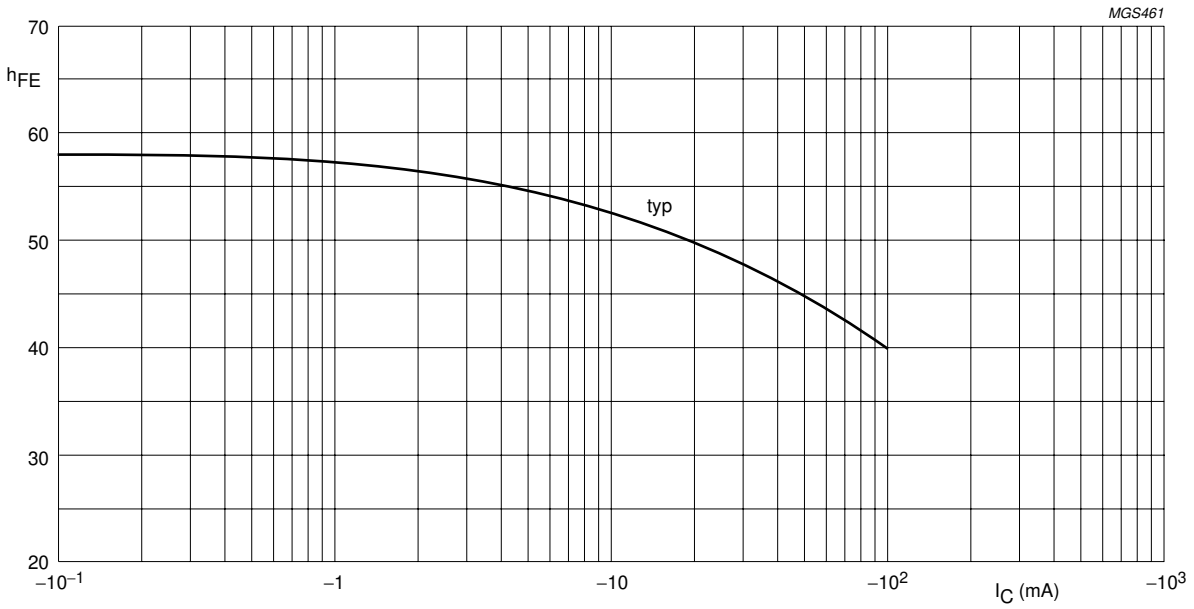

V_{CE} = – 1 V; T_{amb} = 25°C.

Fig.3 DC current gain; typical values.

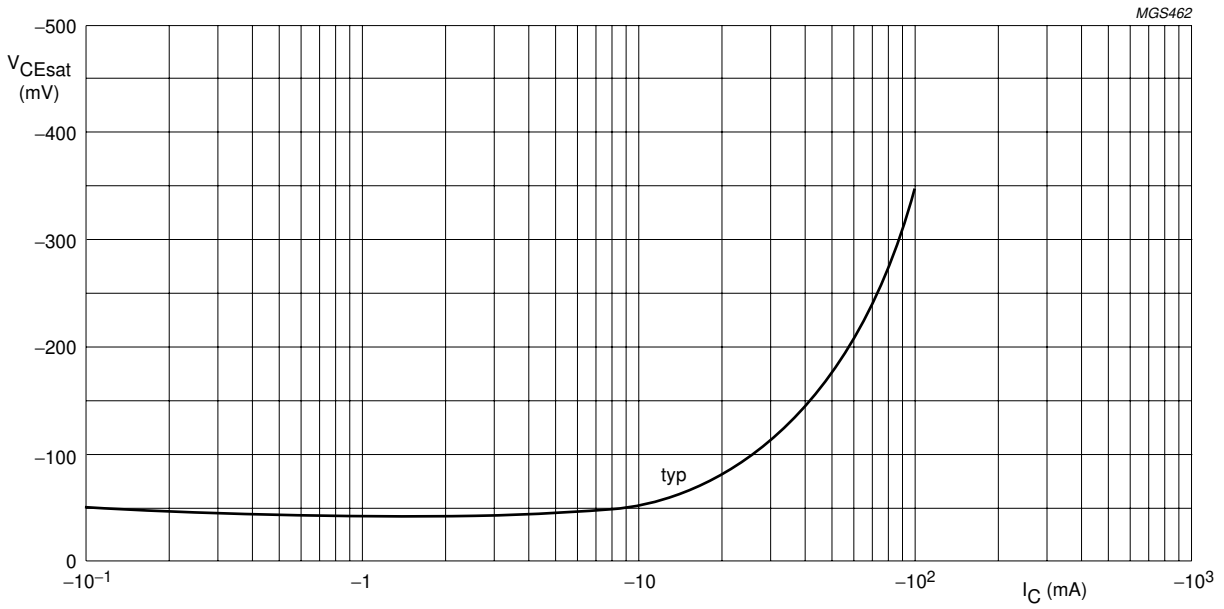

$I_C/I_B = 10$.

Fig.4 Collector-emitter saturation voltage as a function of collector current; typical values.

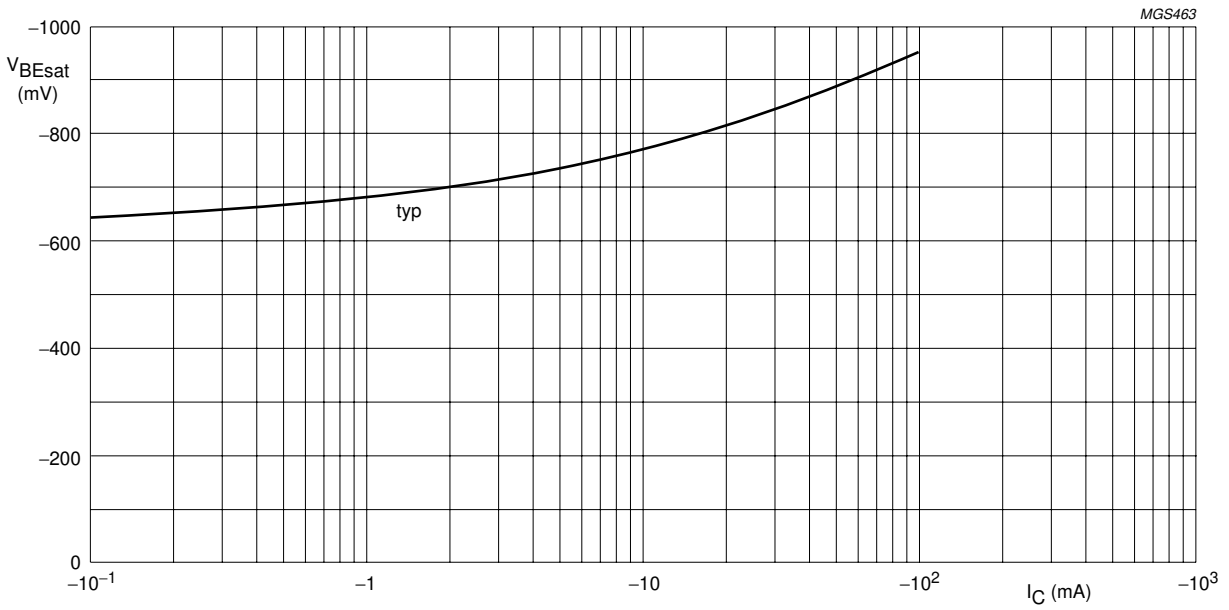

$I_C/I_B = 10$.

Fig.5 Base-emitter saturation voltage as a function of collector current; typical values.

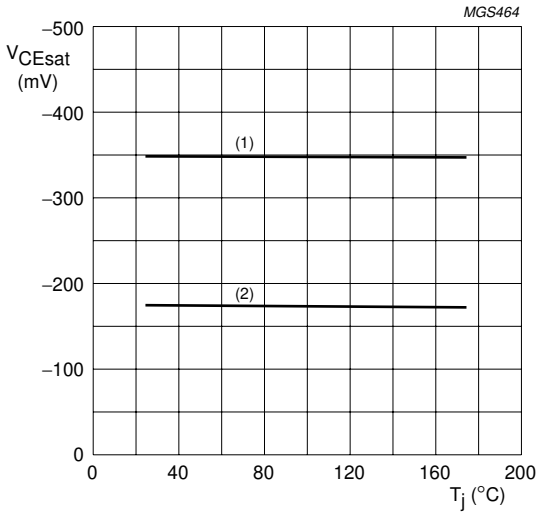

(1) I_C = 100 mA; I_B = 10 mA

(2) I_C = 50 mA and I_B = 5 mA.

Fig.6 Collector-emitter saturation voltage as a function of junction temperature; typical values.

PACKAGE OUTLINE

Plastic surface mounted package; 3 leads **SOT23**

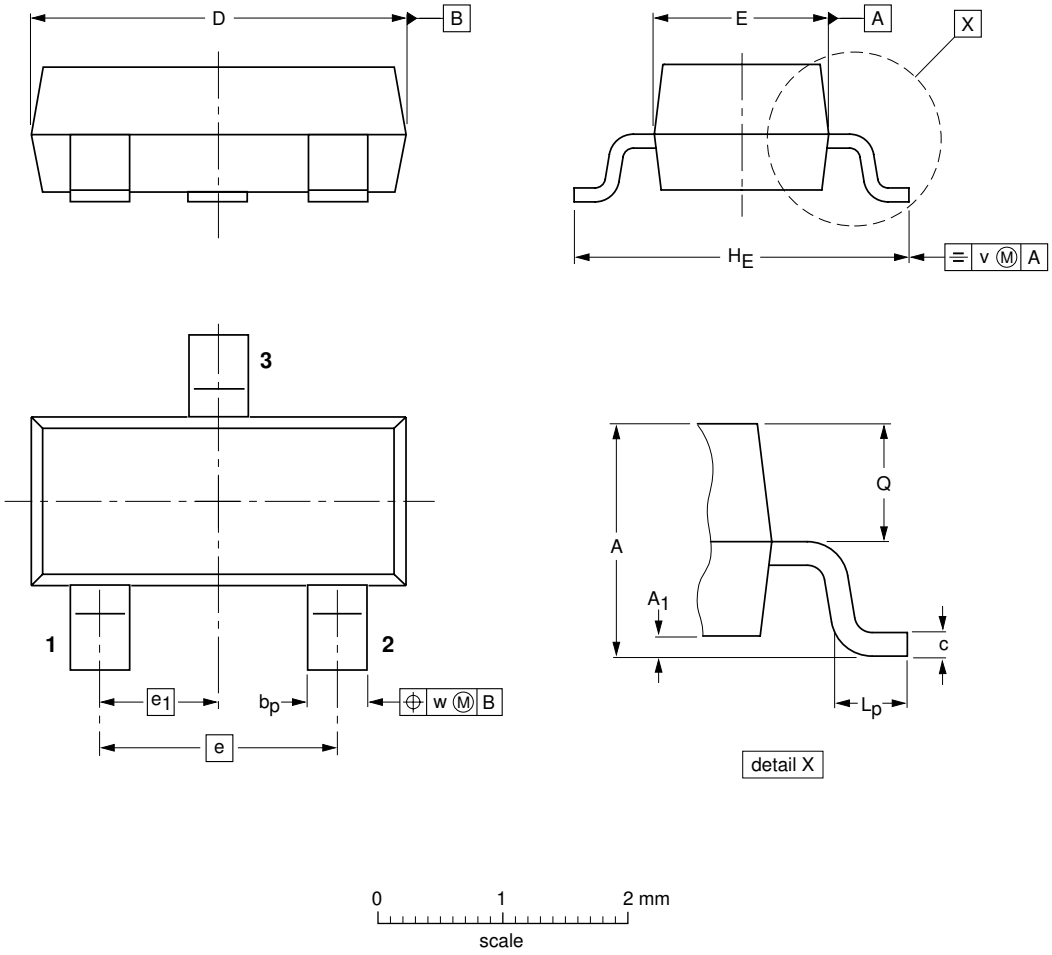

DIMENSIONS (mm are the original dimensions)

UNIT	A	A_1 max.	b_p	c	D	E	e	e_1	H_E	L_p	Q	v	w
mm	1.1 0.9	0.1	0.48 0.38	0.15 0.09	3.0 2.8	1.4 1.2	1.9	0.95	2.5 2.1	0.45 0.15	0.55 0.45	0.2	0.1

OUTLINE VERSION	REFERENCES				EUROPEAN PROJECTION	ISSUE DATE
	IEC	JEDEC	EIAJ			
SOT23						97-02-28

DEFINITIONS

Data sheet status	
Objective specification	This data sheet contains target or goal specifications for product development.
Preliminary specification	This data sheet contains preliminary data; supplementary data may be published later.
Product specification	This data sheet contains final product specifications.
Limiting values	
Limiting values given are in accordance with the Absolute Maximum Rating System (IEC 134). Stress above one or more of the limiting values may cause permanent damage to the device. These are stress ratings only and operation of the device at these or at any other conditions above those given in the Characteristics sections of the specification is not implied. Exposure to limiting values for extended periods may affect device reliability.	
Application information	
Where application information is given, it is advisory and does not form part of the specification.	

LIFE SUPPORT APPLICATIONS

These products are not designed for use in life support appliances, devices, or systems where malfunction of these products can reasonably be expected to result in personal injury. Philips customers using or selling these products for use in such applications do so at their own risk and agree to fully indemnify Philips for any damages resulting from such improper use or sale.

NOTES

NOTES

Philips Semiconductors – a worldwide company

Argentina: see South America

Australia: 3 Figtree Drive, HOMEBUSH, NSW 2140, Tel. +61 2 9704 8141, Fax. +61 2 9704 8139

Austria: Computerstr. 6, A-1101 WIEN, P.O. Box 213, Tel. +43 1 60 101 1248, Fax. +43 1 60 101 1210

Belarus: Hotel Minsk Business Center, Bld. 3, r. 1211, Volodarski Str. 6, 220050 MINSK, Tel. +375 172 20 0733, Fax. +375 172 20 0773

Belgium: see The Netherlands

Brazil: see South America

Bulgaria: Philips Bulgaria Ltd., Energoproject, 15th floor, 51 James Bourchier Blvd., 1407 SOFIA, Tel. +359 2 68 9211, Fax. +359 2 68 9102

Canada: PHILIPS SEMICONDUCTORS/COMPONENTS, Tel. +1 800 234 7381, Fax. +1 800 943 0087

China/Hong Kong: 501 Hong Kong Industrial Technology Centre, 72 Tat Chee Avenue, Kowloon Tong, HONG KONG, Tel. +852 2319 7888, Fax. +852 2319 7700

Colombia: see South America

Czech Republic: see Austria

Denmark: Sydhavnsgade 23, 1780 COPENHAGEN V, Tel. +45 33 29 3333, Fax. +45 33 29 3905

Finland: Sinikalliontie 3, FIN-02630 ESPOO, Tel. +358 9 615 800, Fax. +358 9 6158 0920

France: 51 Rue Carnot, BP317, 92156 SURESNES Cedex, Tel. +33 1 4099 6161, Fax. +33 1 4099 6427

Germany: Hammerbrookstraße 69, D-20097 HAMBURG, Tel. +49 40 2353 60, Fax. +49 40 2353 6300

Hungary: see Austria

India: Philips INDIA Ltd, Band Box Building, 2nd floor, 254-D, Dr. Annie Besant Road, Worli, MUMBAI 400 025, Tel. +91 22 493 8541, Fax. +91 22 493 0966

Indonesia: PT Philips Development Corporation, Semiconductors Division, Gedung Philips, Jl. Buncit Raya Kav.99-100, JAKARTA 12510, Tel. +62 21 794 0040 ext. 2501, Fax. +62 21 794 0080

Ireland: Newstead, Clonskeagh, DUBLIN 14, Tel. +353 1 7640 000, Fax. +353 1 7640 200

Israel: RAPAC Electronics, 7 Kehilat Saloniki St, PO Box 18053, TEL AVIV 61180, Tel. +972 3 645 0444, Fax. +972 3 649 1007

Italy: PHILIPS SEMICONDUCTORS, Via Casati, 23 - 20052 MONZA (MI), Tel. +39 039 203 6838, Fax +39 039 203 6800

Japan: Philips Bldg 13-37, Kohnan 2-chome, Minato-ku, TOKYO 108-8507, Tel. +81 3 3740 5130, Fax. +81 3 3740 5057

Korea: Philips House, 260-199 Itaewon-dong, Yongsan-ku, SEOUL, Tel. +82 2 709 1412, Fax. +82 2 709 1415

Malaysia: No. 76 Jalan Universiti, 46200 PETALING JAYA, SELANGOR, Tel. +60 3 750 5214, Fax. +60 3 757 4880

Mexico: 5900 Gateway East, Suite 200, EL PASO, TEXAS 79905, Tel. +9-5 800 234 7381, Fax +9-5 800 943 0087

Middle East: see Italy

Netherlands: Postbus 90050, 5600 PB EINDHOVEN, Bldg. VB, Tel. +31 40 27 82785, Fax. +31 40 27 88399

New Zealand: 2 Wagener Place, C.P.O. Box 1041, AUCKLAND, Tel. +64 9 849 4160, Fax. +64 9 849 7811

Norway: Box 1, Manglerud 0612, OSLO, Tel. +47 22 74 8000, Fax. +47 22 74 8341

Pakistan: see Singapore

Philippines: Philips Semiconductors Philippines Inc., 106 Valero St. Salcedo Village, P.O. Box 2108 MCC, MAKATI, Metro MANILA, Tel. +63 2 816 6380, Fax. +63 2 817 3474

Poland: Ul. Lukiska 10, PL 04-123 WARSZAWA, Tel. +48 22 612 2831, Fax. +48 22 612 2327

Portugal: see Spain

Romania: see Italy

Russia: Philips Russia, Ul. Usatcheva 35A, 119048 MOSCOW, Tel. +7 095 755 6918, Fax. +7 095 755 6919

Singapore: Lorong 1, Toa Payoh, SINGAPORE 319762, Tel. +65 350 2538, Fax. +65 251 6500

Slovakia: see Austria

Slovenia: see Italy

South Africa: S.A. PHILIPS Pty Ltd., 195-215 Main Road Martindale, 2092 JOHANNESBURG, P.O. Box 58088 Newville 2114, Tel. +27 11 471 5401, Fax. +27 11 471 5398

South America: Al. Vicente Pinzon, 173, 6th floor, 04547-130 SÃO PAULO, SP, Brazil, Tel. +55 11 821 2333, Fax. +55 11 821 2382

Spain: Balmes 22, 08007 BARCELONA, Tel. +34 93 301 6312, Fax. +34 93 301 4107

Sweden: Kottbygatan 7, Akalla, S-16485 STOCKHOLM, Tel. +46 8 5985 2000, Fax. +46 8 5985 2745

Switzerland: Allmendstrasse 140, CH-8027 ZÜRICH, Tel. +41 1 488 2741 Fax. +41 1 488 3263

Taiwan: Philips Semiconductors, 6F, No. 96, Chien Kuo N. Rd., Sec. 1, TAIPEI, Taiwan Tel. +886 2 2134 2886, Fax. +886 2 2134 2874

Thailand: PHILIPS ELECTRONICS (THAILAND) Ltd., 209/2 Sanpavuth-Bangna Road Prakanong, BANGKOK 10260, Tel. +66 2 745 4090, Fax. +66 2 398 0793

Turkey: Yukari Dudullu, Org. San. Blg., 2.Cad. Nr. 28 81260 Umraniye, ISTANBUL, Tel. +90 216 522 1500, Fax. +90 216 522 1813

Ukraine: PHILIPS UKRAINE, 4 Patrice Lumumba str., Building B, Floor 7, 252042 KIEV, Tel. +380 44 264 2776, Fax. +380 44 268 0461

United Kingdom: Philips Semiconductors Ltd., 276 Bath Road, Hayes, MIDDLESEX UB3 5BX, Tel. +44 208 730 5000, Fax. +44 208 754 8421

United States: 811 East Arques Avenue, SUNNYVALE, CA 94088-3409, Tel. +1 800 234 7381, Fax. +1 800 943 0087

Uruguay: see South America

Vietnam: see Singapore

Yugoslavia: PHILIPS, Trg N. Pasica 5/v, 11000 BEOGRAD, Tel. +381 11 62 5344, Fax.+381 11 63 5777

For all other countries apply to: Philips Semiconductors, International Marketing & Sales Communications, Building BE-p, P.O. Box 218, 5600 MD EINDHOVEN, The Netherlands, Fax. +31 40 27 24825

Internet: http://www.semiconductors.philips.com

© Philips Electronics N.V. 1999

SCA67

All rights are reserved. Reproduction in whole or in part is prohibited without the prior written consent of the copyright owner.

The information presented in this document does not form part of any quotation or contract, is believed to be accurate and reliable and may be changed without notice. No liability will be accepted by the publisher for any consequence of its use. Publication thereof does not convey nor imply any license under patent- or other industrial or intellectual property rights.

Printed in The Netherlands 125006/02/pp12 Date of release: 1999 Jul 23 Document order number: 9397 750 06129

Let's make things better.

Philips Semiconductors

PHILIPS