Chipsmall Limited consists of a professional team with an average of over 10 year of expertise in the distribution of electronic components. Based in Hongkong, we have already established firm and mutual-benefit business relationships with customers from,Europe,America and south Asia,supplying obsolete and hard-to-find components to meet their specific needs.

With the principle of “Quality Parts,Customers Priority,Honest Operation,and Considerate Service”,our business mainly focus on the distribution of electronic components. Line cards we deal with include Microchip,ALPS,ROHM,Xilinx,Pulse,ON,Everlight and Freescale. Main products comprise IC,Modules,Potentiometer,IC Socket,Relay,Connector.Our parts cover such applications as commercial,industrial, and automotives areas.

We are looking forward to setting up business relationship with you and hope to provide you with the best service and solution. Let us make a better world for our industry!

Contact us

Tel: +86-755-8981 8866 Fax: +86-755-8427 6832
Email & Skype: info@chipsmall.com Web: www.chipsmall.com
Address: A1208, Overseas Decoration Building, #122 Zhenhua RD., Futian, Shenzhen, China

CUSTOMER TOOL

版数 REV.	年月日 DATE	CN NO.	変更内容 DESCRIPTION	製図 DR.	担当 CHG.	査閲 CHK.	承認 APP.

図面番号 (DRAWING NO.) SJ700315-00

WISDOM承認 2012/08/30

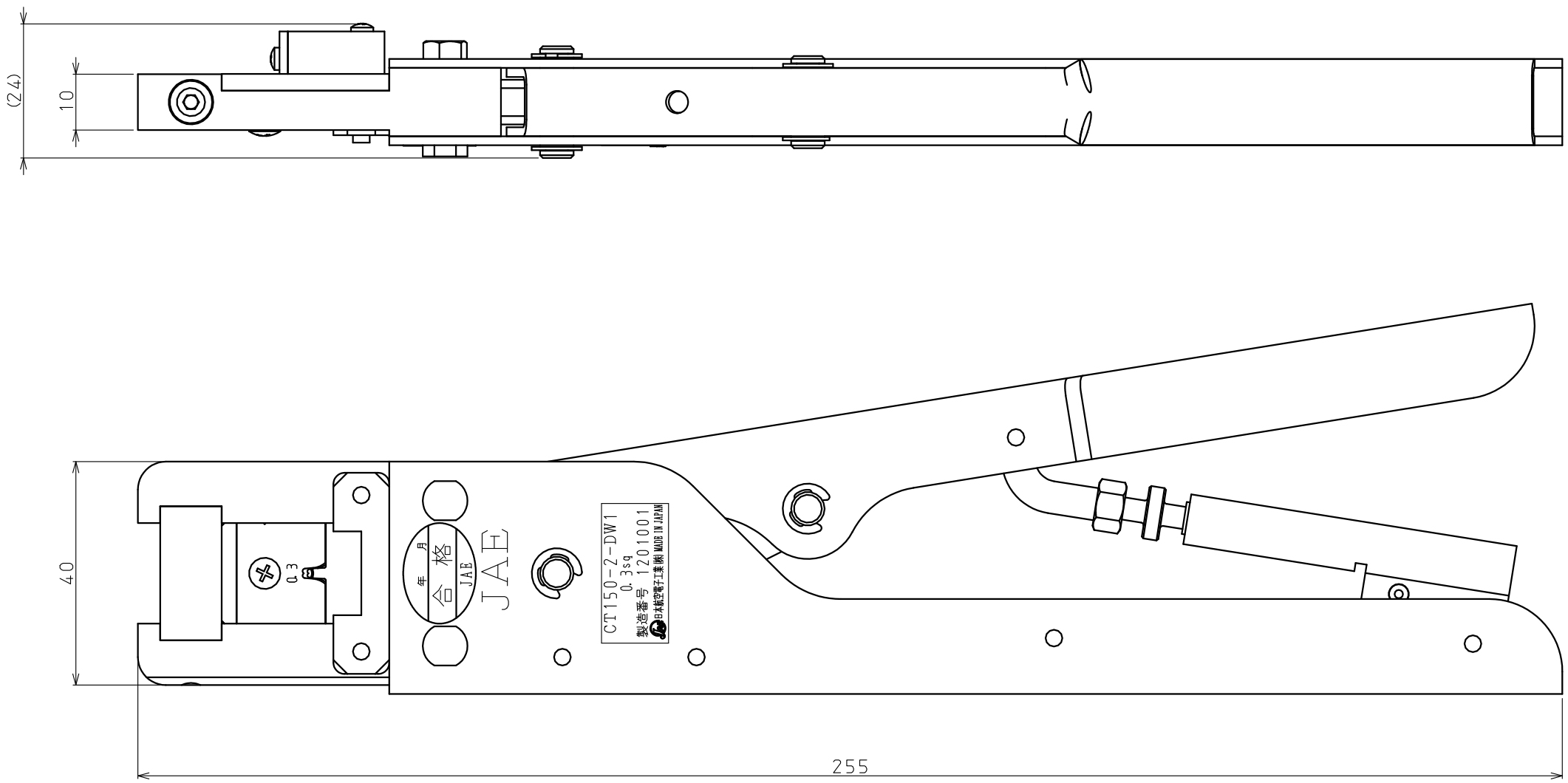

注1. 適用コンタクト：DW1コンタクト(バラシコンタクト)

加工部一般公差	寸法範囲	A級
	50 以下	±0.1
	50を超え260	±0.2
	260 〃 500	±0.3
	500 〃 1000	±0.4

特に指定のない限り、鋭い角やかえりは除去すること。
SHARP EDGES AND BURRS SHOULD BE ELIMINATED EXCEPT FOR SPECIAL REQUESTS.

一般公差 (TOLERANCE)
特に指定がなければ CTS-4100による。
SEE CTS-4100 IF UNABLE TO FIND TOLERANCE ON DRAWING OR AS BELOW.

寸法 (DIMENSION)	角度 (ANGLES)
. ±	×° ±
.× ±	××′ ±
.×× ±	
.××× ±	

符号 NO.	名称 DESCRIPTION	個数 QTY.	材料 MATERIAL	仕上 FINISH	備考 NOTE.

仕様書 (SPECIFICATION)
組立図番 (A'SSY DWG. NO.)
材料 (MATERIAL)
仕上 (FINISH)
処理 (TREATMENT)

第1版 (ORIGINAL DATE) 29·Aug·2012
製図 DR.
担当 CHG. T. OOKAWA
査閲 CHK. K. KOIDE
承認 APP. H. AKIMOTO

尺度 (SCALE) 1:1
個数 (QTY.)
名称 (TITLE) CT150-2-DW1
シリーズ (SERIES)
重量 (WEIGHT)

日本航空電子工業株式会社
JAPAN AVIATION ELECTRONICS INDUSTRY, LTD.

図面番号 (DRAWING NO.) SJ700315-00

SIZE A3

DCF-S-0093B (11.12)

0 10 20 30 40 50 60 70 80 90 100

ICAD

JAE CONNECTOR DIV. PROPRIETARY.
COPYRIGHT© 2012, JAPAN AVIATION ELECTRONICS INDUSTRY, LTD.