Chipsmall Limited consists of a professional team with an average of over 10 year of expertise in the distribution of electronic components. Based in Hongkong, we have already established firm and mutual-benefit business relationships with customers from,Europe,America and south Asia,supplying obsolete and hard-to-find components to meet their specific needs.

With the principle of “Quality Parts,Customers Priority,Honest Operation,and Considerate Service”,our business mainly focus on the distribution of electronic components. Line cards we deal with include Microchip,ALPS,ROHM,Xilinx,Pulse,ON,Everlight and Freescale. Main products comprise IC,Modules,Potentiometer,IC Socket,Relay,Connector.Our parts cover such applications as commercial,industrial, and automotives areas.

We are looking forward to setting up business relationship with you and hope to provide you with the best service and solution. Let us make a better world for our industry!

Contact us

Tel: +86-755-8981 8866 Fax: +86-755-8427 6832
Email & Skype: info@chipsmall.com Web: www.chipsmall.com
Address: A1208, Overseas Decoration Building, #122 Zhenhua RD., Futian, Shenzhen, China

Copying of this document and giving it to others and the use or communication of the contents thereof, are forbidden without express authority. Offenders are liable to the payment of damages. All rights are reserved in the event of the grant of a patent or the registration of the utility model or design.

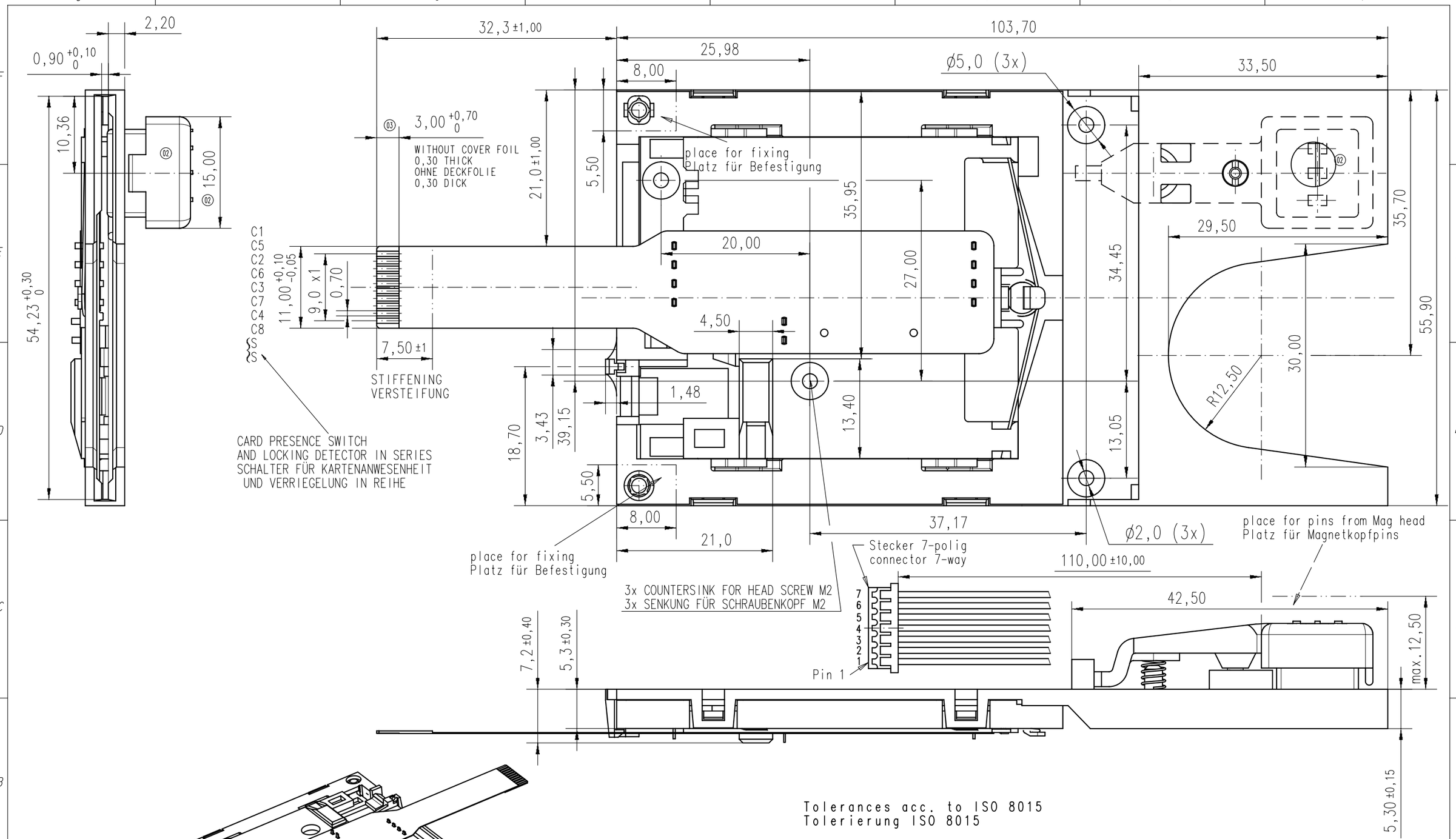

Tolerances acc. to ISO 8015
Tolerierung ISO 8015

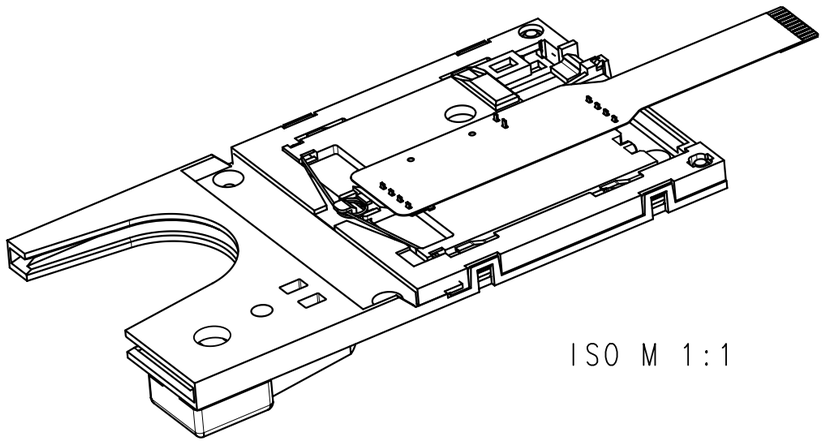

ISO M 1:1

Gewicht (errechnet)/ *Calc WT:* 9	Zul. Abw./*Tolerances:* ISO 2768-mL	DIN 6784	Maßstab/*Scale* 2:1 (1:1) A3
Prüfmaß/*Testdimension*			CUSTOMER DRAWING
Teileindex *Partindexnumber*			Hybridreader 3-Track Hybridleser 3-Spur

Index	Änderung/*Description*	Datum/*Date*	Name
03	200700823	25.03.08	Tol.
02	200500353	10.05.05	Tol.
01	200300718	11.12.03	Ell

	Datum/*Date*	Name
03		
Gez. *Drawn*	11.12.	Ellsaes.
Gepr. *Checked*		?

Amphenol-Tuchel Electronics GmbH

M C703 10M008 601 5 — Blatt/*Sheet* 1 / 1 Bl.

Ers. f./*Similar to:*

Weitergabe sowie Vervielfältigung dieser Unterlage, Verwertung und Mitteilung ihres Inhalts nicht gestattet, soweit nicht ausdrücklich zugestanden. Zuwiderhandlungen verpflichten zu Schadenersatz. Alle Rechte für den Fall der Patenterteilung oder Gebrauchsmuster-Eintragung vorbehalten.

olksdorf/26.03.2008