Chipsmall Limited consists of a professional team with an average of over 10 year of expertise in the distribution of electronic components. Based in Hongkong, we have already established firm and mutual-benefit business relationships with customers from,Europe,America and south Asia,supplying obsolete and hard-to-find components to meet their specific needs.

With the principle of “Quality Parts,Customers Priority,Honest Operation,and Considerate Service”,our business mainly focus on the distribution of electronic components. Line cards we deal with include Microchip,ALPS,ROHM,Xilinx,Pulse,ON,Everlight and Freescale. Main products comprise IC,Modules,Potentiometer,IC Socket,Relay,Connector.Our parts cover such applications as commercial,industrial, and automotives areas.

We are looking forward to setting up business relationship with you and hope to provide you with the best service and solution. Let us make a better world for our industry!

Contact us

Tel: +86-755-8981 8866 Fax: +86-755-8427 6832
Email & Skype: info@chipsmall.com Web: www.chipsmall.com
Address: A1208, Overseas Decoration Building, #122 Zhenhua RD., Futian, Shenzhen, China

THIS DRAWING IS A CONTROLLED DOCUMENT FOR TYCO ELECTRONICS CORPORATION
IT IS SUBJECT TO CHANGE AND THE CONTROLLING ENGINEERING ORGANIZATION
SHOULD BE CONTACTED FOR THE LATEST REVISION.

LOC	DIST
E	B

REVISIONS

P	LTR	DESCRIPTION	DATE	DWN	APVD
	BA	NEW RELEASE	18-NOV-08	SM	St.P

FOR FURTHER INFORMATION SEE DATA SHEET FOR
C SERIES-HIGH POWER RESISTORS

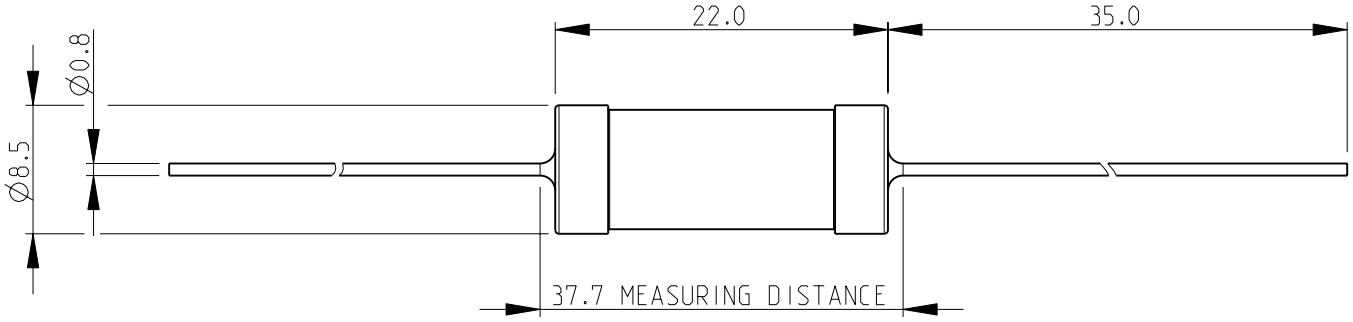

RoHS Compliant

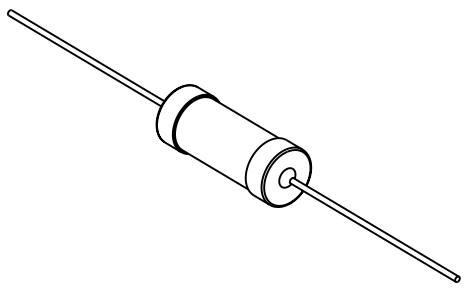

SCALE 1:1

THIS DRAWING IS UNPUBLISHED. © COPYRIGHT 2008 BY TYCO ELECTRONICS CORPORATION. ALL RIGHTS RESERVED.
RELEASED FOR PUBLICATION 2008

DIMENSIONS: mm

TOLERANCES UNLESS OTHERWISE SPECIFIED:

0 PLC	±0.2
1 PLC	±0.1
2 PLC	±-
3 PLC	±-
4 PLC	±-
ANGLES	±5°

DWN SUBHASH.M 18-NOV-08
CHK PRAKASH.S 18-NOV-08
APVD STEPHEN.P 18-NOV-08
PRODUCT SPEC –
APPLICATION SPEC –
WEIGHT –

MATERIAL –
FINISH –

Tyco Electronics
Tyco Electronics Corporation
Dorcan, Swindon, SN3 5HH

NAME HIGH POWER RESISTORS SERIES C7

SIZE	CAGE CODE	DRAWING NO	RESTRICTED TO
A4	00779	C-1623772	–

CUSTOMER DRAWING

SCALE 2:1 SHEET 1 OF 1 REV BA

AMP 1469-35 REV 31MAR2000

Pro/ENGINEER DRAWING