Chipsmall Limited consists of a professional team with an average of over 10 year of expertise in the distribution of electronic components. Based in Hongkong, we have already established firm and mutual-benefit business relationships with customers from,Europe,America and south Asia,supplying obsolete and hard-to-find components to meet their specific needs.

With the principle of “Quality Parts,Customers Priority,Honest Operation,and Considerate Service”,our business mainly focus on the distribution of electronic components. Line cards we deal with include Microchip,ALPS,ROHM,Xilinx,Pulse,ON,Everlight and Freescale. Main products comprise IC,Modules,Potentiometer,IC Socket,Relay,Connector.Our parts cover such applications as commercial,industrial, and automotives areas.

We are looking forward to setting up business relationship with you and hope to provide you with the best service and solution. Let us make a better world for our industry!

Contact us

Tel: +86-755-8981 8866 Fax: +86-755-8427 6832
Email & Skype: info@chipsmall.com Web: www.chipsmall.com
Address: A1208, Overseas Decoration Building, #122 Zhenhua RD., Futian, Shenzhen, China

THIS COPY IS PROVIDED ON A RESTRICTED BASIS AND IS NOT TO BE USED IN ANY WAY DETRIMENTAL TO THE INTERESTS OF PANDUIT CORP.

PART NO.	COMPONENT	RECOMMENDED FOR CABLE OUTER DIAMETER RANGE	USE THE FOLLOWING INSERT	INSERT USED WITH THE FOLLOWING PANDUIT CABLE TYPES	COMPONENT WEIGHT LBS. - (g)	No. OF CABLES	A in. (mm)	B in. (mm)	C in. (mm)
CBOT24K	JACKET	N/A	N/A	N/A	.031 (14)	N/A	3.40 (86.4)	1.12 (28.4)	2.86 (72.6)
	GREEN INSERT	.180"-.248" (4.57mm-6.30mm)	FLOURESCENT GREEN	TX5500 CATEGORY 5e UTP TX6000 CATEGORY 6 UTP	.048 (22)	24			
	YELLOW INSERT	.230"-.310" (5.84mm-7.87mm)	FLOURESCENT YELLOW	TX6500 ENHANCED CATEGORY 6 TX6A 10 Gig CATEGORY 6A** ALL SHIELDED CABLES	.046 (21)	24			
	UCT3S-P2-0	N/A	N/A	N/A	.006 (3)	N/A			

**WHEN USING THE CBOT24K ON 10Gig CABLES, IT IS RECOMMENDED THAT PANDUIT 10Gig CAT 6A CABLES BE USED FOR OPTIMUM PERFORMANCE OF INSTALLED CABLE.

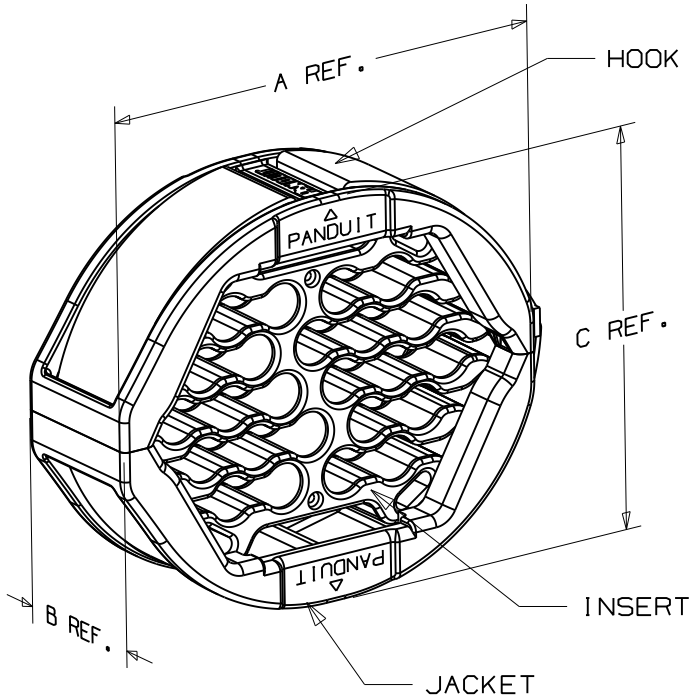

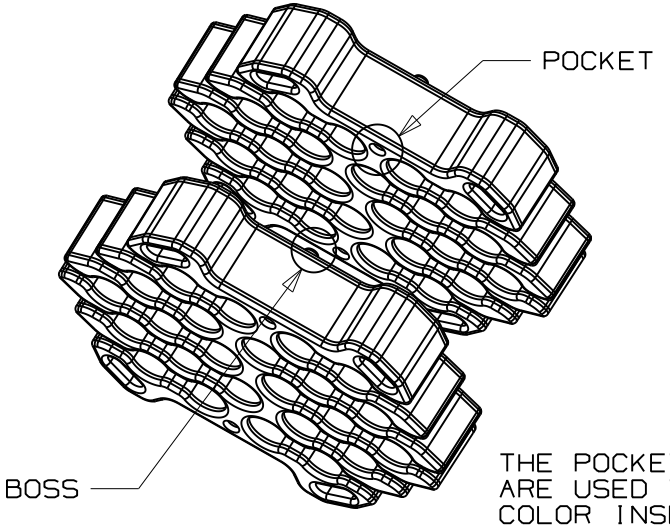

THE POCKET AND BOSS FEATURES ARE USED TO ALIGN TWO SAME COLOR INSERTS

REV	DATE	BY	CHK	DESCRIPTION	ECN - R	CUST	SUP
R	1/25/08	RAMA	BOBK	DRAWING RELEASED	R		

CAD FILENAME/LAYERS: W10001CH/00

PANDUIT CORP. TINLEY PARK, ILLINOIS

CBOT24K
CABLE BUNDLE ORGANIZING TOOL

UNLESS OTHERWISE SPECIFIED, DIMENSIONAL TOLERANCES ARE:
(.X) ± (.XXX) ±
(.XX) ± ANGLES ±

UNLESS OTHERWISE SPECIFIED, ALL DIMENSIONS ARE GIVEN IN INCHES, THIRD ANGLE PROJECTION.

DRAWN BY: RAMA
DATE: 1/25/07
CHK'D: BOBK
MAT'L: NYLON 6/6
SCALE: 3/4
DRAWING NO.: SS-27576
DWG SIZE: A