Chipsmall Limited consists of a professional team with an average of over 10 year of expertise in the distribution of electronic components. Based in Hongkong, we have already established firm and mutual-benefit business relationships with customers from,Europe,America and south Asia,supplying obsolete and hard-to-find components to meet their specific needs.

With the principle of “Quality Parts,Customers Priority,Honest Operation,and Considerate Service”,our business mainly focus on the distribution of electronic components. Line cards we deal with include Microchip,ALPS,ROHM,Xilinx,Pulse,ON,Everlight and Freescale. Main products comprise IC,Modules,Potentiometer,IC Socket,Relay,Connector.Our parts cover such applications as commercial,industrial, and automotives areas.

We are looking forward to setting up business relationship with you and hope to provide you with the best service and solution. Let us make a better world for our industry!

Contact us

Tel: +86-755-8981 8866 Fax: +86-755-8427 6832
Email & Skype: info@chipsmall.com Web: www.chipsmall.com
Address: A1208, Overseas Decoration Building, #122 Zhenhua RD., Futian, Shenzhen, China

REV.	N° DCR	NATURE DE LA MODIFICATION	DATE	VISA
C	ECR-1482	SPC dimensions added ; contact forces : 0,7 max & 0,4 min 1.1±0.15/-0.1 ▷ 1.1±0.15 ; 0.75±0.1/-0.15 ▷ 0.75±0.15	05/10/2007	V.P
	ECR-1415	1±0,05 ▷ 1,1±0,05		

SYSTEM CONFIDENTIAL

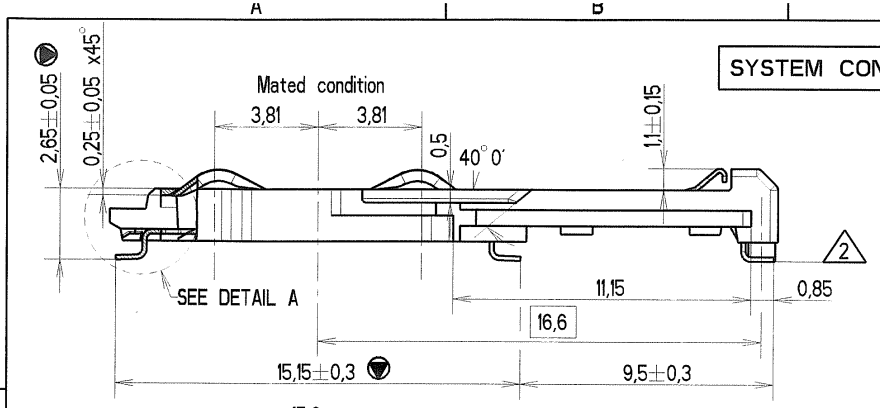

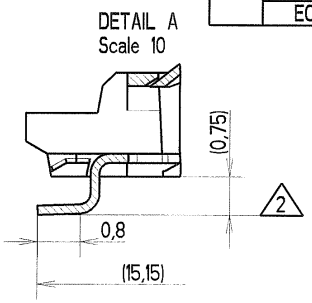

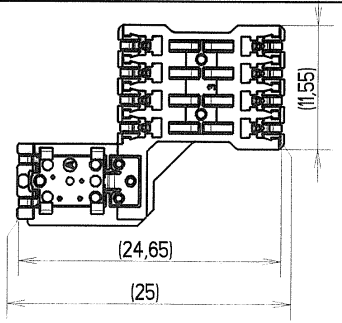

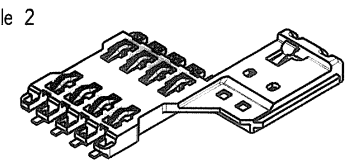

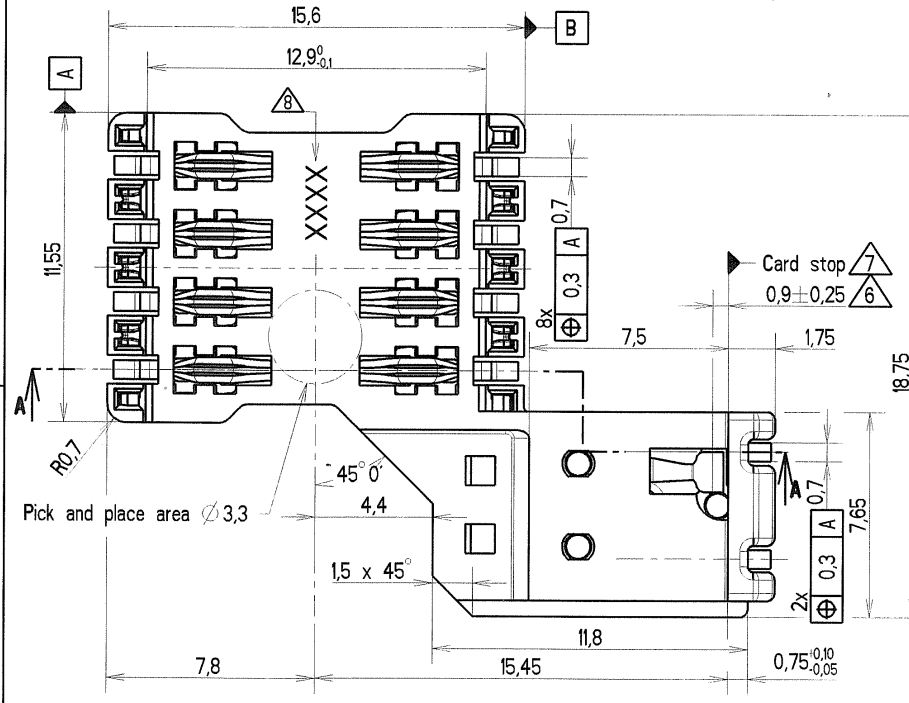

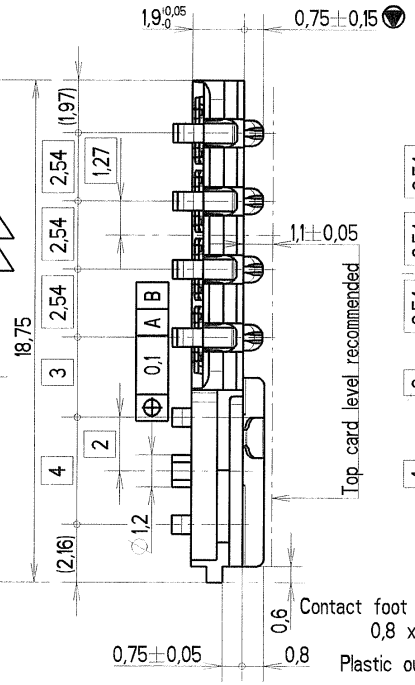

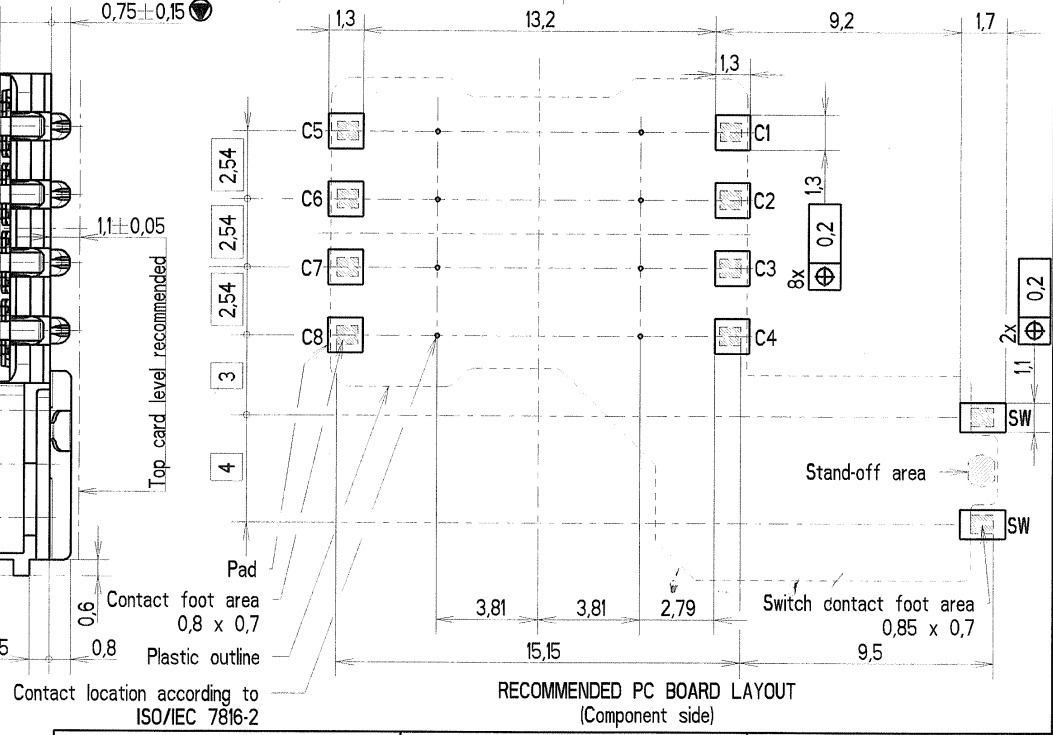

RECOMMENDED PC BOARD LAYOUT
(Component side)

Notes :
- 1 - Termination to PCB : SMT reflow soldering. Temperature/time profile according to C&K PS-LF-001 specification.
- 2 - Coplanarity of metal soldering surfaces : 0,1 mm.
- 3 - Recommendation for solder paste thickness > 0,2 mm.
- 4 - 2,5 microns min tin plating on contact terminal areas and 0,1 microns min gold plating on switch terminal areas.
- 5 - Contact forces :
  - max 0,7 N per contact at 0,2 from Card seating area.
  - min 0,4 N per contact at 0,2 from Card seating area.
- 6 - Card end travel switch NO activates when the sliding card is 0,9 mm from card stop.
- 7 - Another mechanical stop should be placed belong the rear side of the connector to increase the strengh of the card stop.
- 8 - Date Code area : Year (X) / Week (XX) and Day range in the week (X).
- 9 - For packaging on tape and reel, see document : cu 030287Y0001.

MATIERE	TRAITEMENT	PROTECTION
SAUF INDIQUE : TOL. LINEAIRE ± 0,2 TOL. ANGULAIRE ± 2 °		DIMENSIONS CRITIQUES 1
-COTES DONNEES AVANT PROTECTION -BAVURES ET ARETES VIVES SUPPRIMEES	ETAT DE SURFACE Ra	DIMENSIONS SPC 4
DESSINE P.DAUBIGNEY DATE 06-09-05	ANALYSE N TAB. FAM. Y PRO/E Y	LANGAGE E
VERIFIE G.PINON DATE 05/10/2007		
APPROUVE L.KUBAT DATE 05/10/2007	REMPLACE	
C&K Components	PROJECTION 1-ER DIEDRE	DESIGNATION CCM04-5427LFT 2x4 contacts switch NO 2,65 mm - without card retention
	ECHELLE 5,000	
BP 359 - 39105 Dole - FRANCE -	TAILLE A3 FEUILLE 1 / 1	NUMERO CU 030288Y5427 REV C

CE PLAN EST LA PROPRIETE DE C&K COMPONENTS SAS ET NE PEUT ETRE REPRODUIT OU COMMUNIQUE SANS SON AUTORISATION