Chipsmall Limited consists of a professional team with an average of over 10 year of expertise in the distribution of electronic components. Based in Hongkong, we have already established firm and mutual-benefit business relationships with customers from,Europe,America and south Asia,supplying obsolete and hard-to-find components to meet their specific needs.

With the principle of “Quality Parts,Customers Priority,Honest Operation,and Considerate Service”,our business mainly focus on the distribution of electronic components. Line cards we deal with include Microchip,ALPS,ROHM,Xilinx,Pulse,ON,Everlight and Freescale. Main products comprise IC,Modules,Potentiometer,IC Socket,Relay,Connector.Our parts cover such applications as commercial,industrial, and automotives areas.

We are looking forward to setting up business relationship with you and hope to provide you with the best service and solution. Let us make a better world for our industry!

# Contact us

Tel: +86-755-8981 8866 Fax: +86-755-8427 6832
Email & Skype: info@chipsmall.com Web: www.chipsmall.com
Address: A1208, Overseas Decoration Building, #122 Zhenhua RD., Futian, Shenzhen, China

図面番号(DRAWING NO.) SJ107335

| 版数 REV. | 年月日 DATE | DCN NO. | 変更内容 DESCRIPTION | 製図 DR. | 担当 CHK. | 査閲 APPD. | 承認 APPD. |
|---|---|---|---|---|---|---|---|
| | | | | | | | |
| | | | | | | | |
| | | | | | | | |

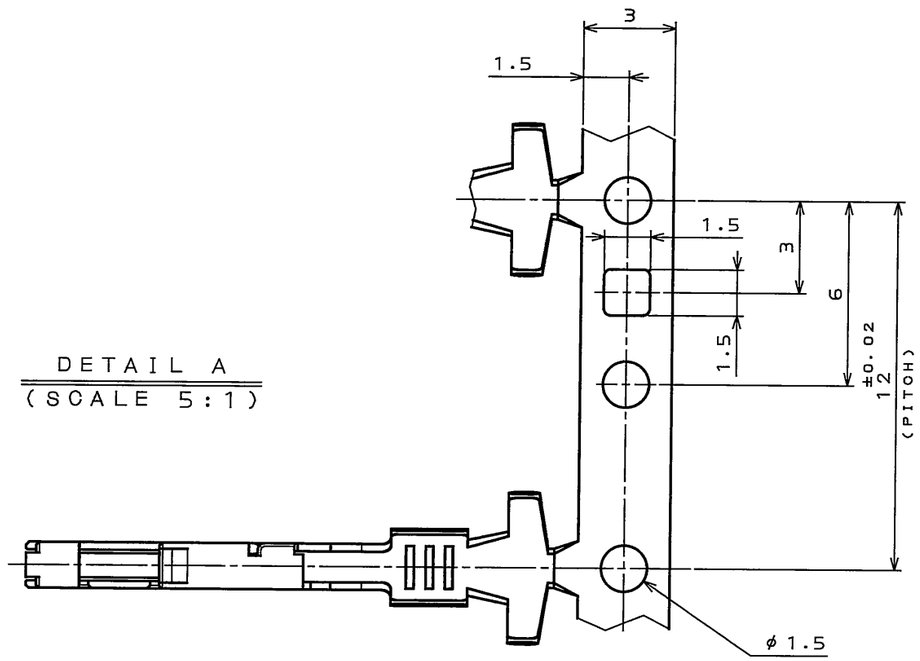


DETAIL A
(SCALE 5:1)

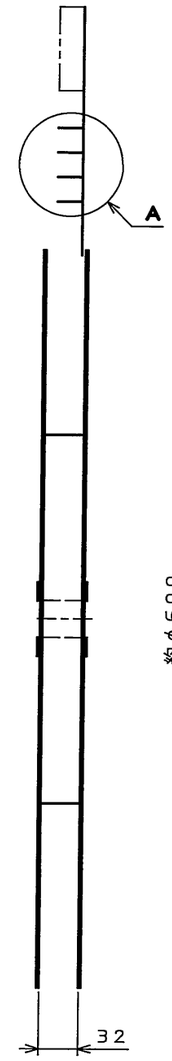


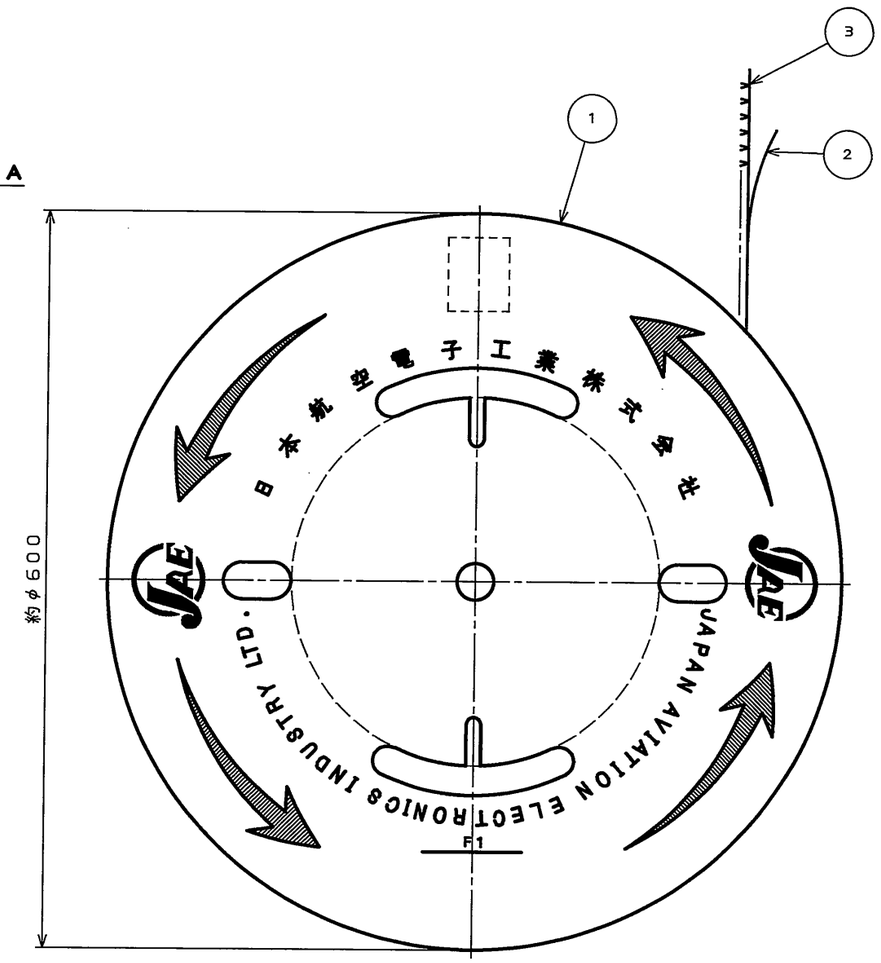


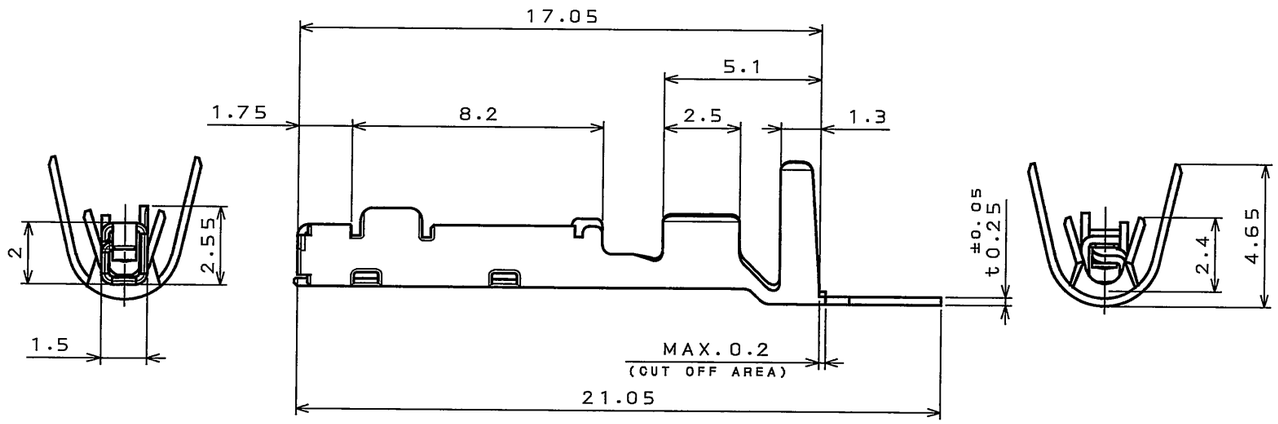


| 符号 NO. | 名称 DESCRIPTION | 個数 QTY. | 材料 MATERIAL | 仕上 FINISH | 備考 REMARKS |
|---|---|---|---|---|---|
| 3 | SOCKET CONTACT | 2800 | MSP1R | PLATING:Sn | |
| 2 | TAPE | 1 | PAPER | ―― | |
| 1 | REEL | 1 | PAPER | ―― | |

仕様書(SPECIFICATION) JACS-20084

第1版(ORIGINAL DATE) 6.Aug.2007

製図 DR.

担当 CHK. T.MIYASHITA

査閲 APPD. ―

承認 APPD. Y.Sugii

一般公差(GENERAL TOLERANCE)

| 寸法(DIMENSION) | | 角度(ANGLES) |
|---|---|---|
| . | ±0.8 | X° ± |
| .X | ±0.4 | X°X' ± |
| .XX | ±0.1 | |
| .XXX | ± | |

尺度(SCALE) 1:5

シリーズ(SERIES) CE2

名称(TITLE) CE2C28HC01

質量(MASS)

日本航空電子工業株式会社
JAPAN AVIATION ELECTRONICS INDUSTRY, LTD.

図面番号(DRAWING NO.) SJ107335

版数(REV.) 1

SIZE A3

NOTE.1 APPLICABLE WIRE: HAV 0.5sq (ONLY HAV-0.5sq USE)
NOTE.2 THE SHEARED EDGES OF CONTACT AREA ARE NOT PLATED.

注1 適用電線はHAV 0.5sqのみとする(HAV 0.5sq専用)。
注2 切断面にめっきはつかない。

DOF-0-212F(05.08)

0 10 20 30 40 50 60 70 80 90 100

JAE-CONNECTOR.COM
Reference only

JAE CONNECTOR DIV. PROPRIETARY.
COPYRIGHT (C) 2007, JAPAN AVIATION ELECTRONICS INDUSTRY, LTD.