Chipsmall Limited consists of a professional team with an average of over 10 year of expertise in the distribution of electronic components. Based in Hongkong, we have already established firm and mutual-benefit business relationships with customers from,Europe,America and south Asia,supplying obsolete and hard-to-find components to meet their specific needs.

With the principle of “Quality Parts,Customers Priority,Honest Operation,and Considerate Service”,our business mainly focus on the distribution of electronic components. Line cards we deal with include Microchip,ALPS,ROHM,Xilinx,Pulse,ON,Everlight and Freescale. Main products comprise IC,Modules,Potentiometer,IC Socket,Relay,Connector.Our parts cover such applications as commercial,industrial, and automotives areas.

We are looking forward to setting up business relationship with you and hope to provide you with the best service and solution. Let us make a better world for our industry!

Contact us

Tel: +86-755-8981 8866 Fax: +86-755-8427 6832
Email & Skype: info@chipsmall.com Web: www.chipsmall.com
Address: A1208, Overseas Decoration Building, #122 Zhenhua RD., Futian, Shenzhen, China

NOTES:
1. MOUNTING: Mounts in a ∅.250±.002 [∅6.35mm±.05] panel hole on .375 [9.5mm] centers. Panel thickness .063 [1.6mm] to .125 [3.17mm]. Panel hole should be deburred, but not chamfered.
2. ASSEMBLY: Insert lens through panel hole, and insert LED into lens.
3. MATERIAL: Polycarbonate, UL 94-V2
   GLO Series- Polycarbonate & Acrylic blend
4. U.S. & Foreign Pat. Issued & Pend.

REVISIONS				
ECN#	REV.	DESCRIPTION	DATE	INITIALS
	1	ADD GLO SERIES	1-6-09	JG
	001	REVISED PER ECR111009AZ01	4-23-10	SMU

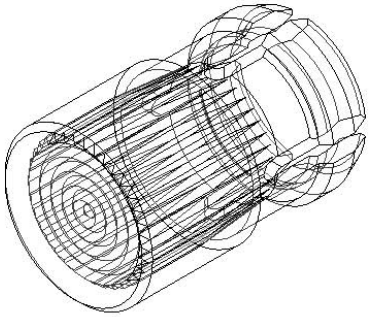

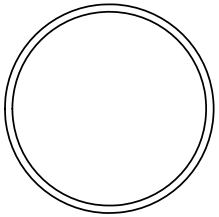

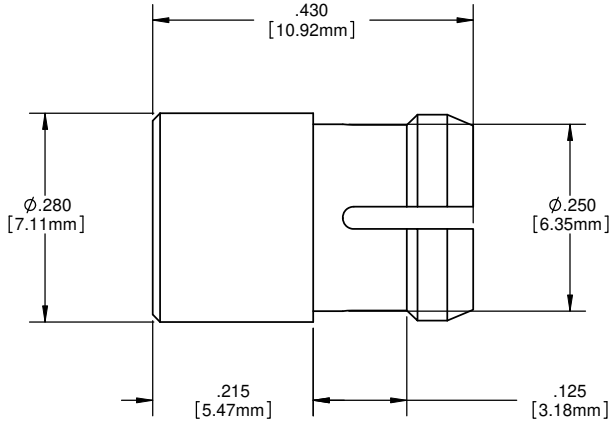

ORDERING CODE : **CLF280 XXX**

MODEL

LENS COLOR	
RTP	RED TRANSPARENT
ATP	AMBER TRANSPARENT
GTP	GREEN TRANSPARENT
BTP	BLUE TRANSPARENT
YTP	YELLOW TRANSPARENT
CTP	CLEAR TRANSPARENT
GLO	WHITE TRANSLUCENT

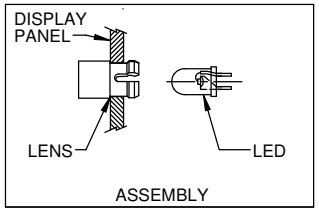

UNLESS OTHERWISE SPECIFIED DIMENSIONS ARE IN INCHES:
ANGLES ±1° DECIMALS .X ±.020 .XX ±.010 .XXX ±.005
FINISH
BREAK ALL CORNERS AND SHARP EDGES .030 MAX

THIRD ANGLE PROJECTION

PROPRIETARY AND CONFIDENTIAL
THE INFORMATION CONTAINED IN THIS DRAWING IS THE PROPERTY OF VISUAL COMMUNICATIONS COMPANY, INC. ANY REPRODUCTION IN PART OR AS A WHOLE WITHOUT THE WRITTEN PERMISSION OF VISUAL COMMUNICATIONS COMPANY, INC IS PROHIBITED.

MATERIAL: POLYCARBONATE, UL 94-V2

FINISH: SEE NOTES

APPROVAL		DATE
DRAWN:	SMU	4-23-10
CHECKED:	DZ	4-23-10

DO NOT SCALE DRAWING

VISUAL COMMUNICATIONS COMPANY, INC.
190 Bosstick Boulevard, Suite101 San Marcos, CA 92069 USA
Phone (760) 560-1300 Fax (760) 560-1301 email vccsales@vcclite.com

TITLE: 5MM ROUND STANDARD HEIGHT FRESNEL LENS

SIZE	DWG. NO.	REV
B	CLF 280 XXX	001

SCALE: 1:1 SHEET 1 OF 1