Chipsmall Limited consists of a professional team with an average of over 10 year of expertise in the distribution of electronic components. Based in Hongkong, we have already established firm and mutual-benefit business relationships with customers from,Europe,America and south Asia,supplying obsolete and hard-to-find components to meet their specific needs.

With the principle of “Quality Parts,Customers Priority,Honest Operation,and Considerate Service”,our business mainly focus on the distribution of electronic components. Line cards we deal with include Microchip,ALPS,ROHM,Xilinx,Pulse,ON,Everlight and Freescale. Main products comprise IC,Modules,Potentiometer,IC Socket,Relay,Connector.Our parts cover such applications as commercial,industrial, and automotives areas.

We are looking forward to setting up business relationship with you and hope to provide you with the best service and solution. Let us make a better world for our industry!

Contact us

Tel: +86-755-8981 8866 Fax: +86-755-8427 6832
Email & Skype: info@chipsmall.com Web: www.chipsmall.com
Address: A1208, Overseas Decoration Building, #122 Zhenhua RD., Futian, Shenzhen, China

THIS COPY IS PROVIDED ON A RESTRICTED BASIS AND IS NOT TO BE USED IN ANY WAY DETRIMENTAL TO THE INTERESTS OF PANDUIT CORP.

PART NUMBER	FOR PANDUIT H-TAPS	DIMENSIONS IN INCHES		
		L	W	H
CLRCVR1-1	HTCT6X-6X-1	4.48	1.41	1.20

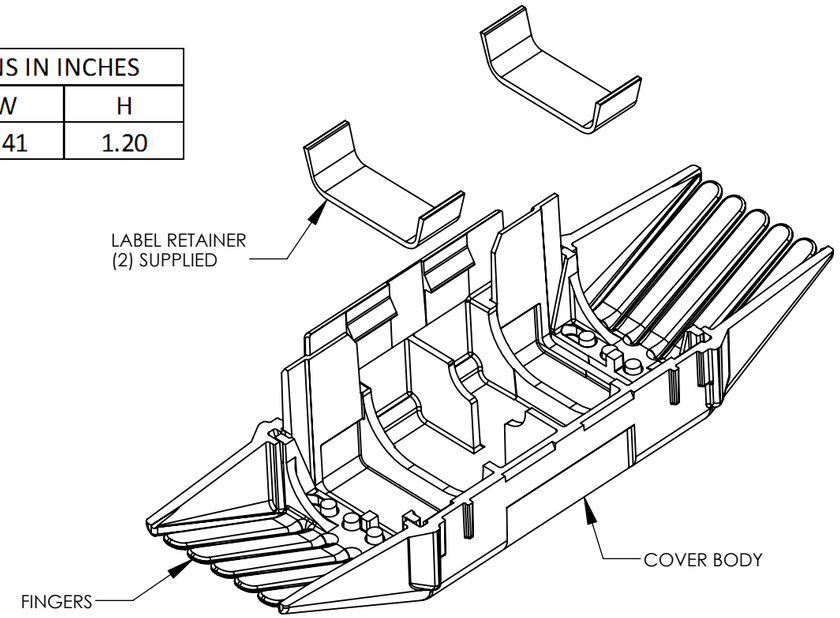

NOTES

1. MATERIAL:
   CLEAR POLYCARBONATE COVER BODY WITH BLACK POLYPROPYLENE FINGERS
   A. HIGH IMPACT STRENGTH
   B. U.V. RESISTANT
   C. FLAMMABILITY RATED (UL94 V-0)
   D. LIMITING OXYGEN INDEX (L.O.I.) = 28 MINIMUM

2. UL LISTED & CSA CERTIFIED:
   A. WHEN USED WITH SPECIFIED PANDUIT H-TAPS
   B. MAXIMUM TEMPERATURE RATING OF INSULATION MATERIAL: 90°C
   C. VOLTAGE RATING OF COVER: 600V MAX.

3. COVER PART NUMBER INCLUDES TWO (2) COVER HALVES, TWO (2) MATTED SURFACE SNAP IN LABEL RETAINERS, AND TWO (2) CABLE TIES TO SUPPLEMENT THE MOLDED-IN LATCHES.

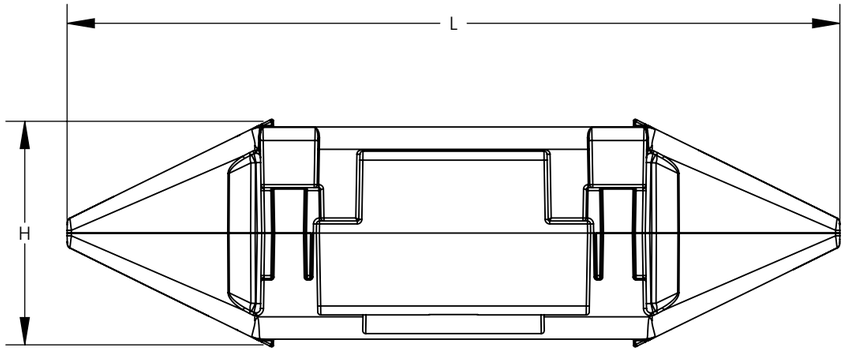

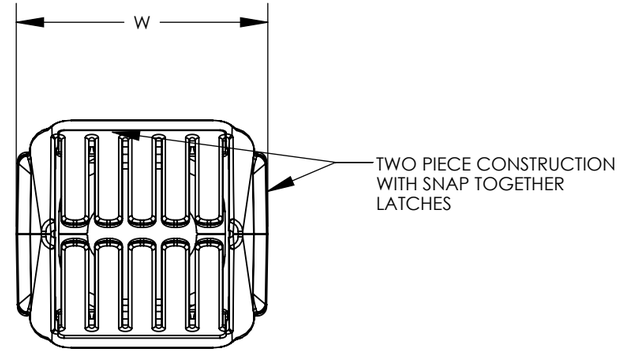

C UL US LISTED WIRE CONNECTOR

CSA CERTIFIED

REV	DATE	BY	CHK	DESCRIPTION	ECN	-R	SUP
02	5/11	JHNU	JHNU	REVISED PART NUMBER IN TABLE: CLRCVR1-1 WAS CLRCVR2-1	N41472BA-C41472	FLD	FLD
01	4/11	JHNU	JHNU	REMOVED HTAP PART NUMBERS HTCT8-8-1 & HTCT6-6-1, ADDED HTCT6X-6X-1 CONVERTED DWG TO SOLIDWORKS, REVISED AGENCY LOGO	N41472BA-C41472	FLD	FLD
00	12/04	JHNU	JHNU	DRAWING RELEASED			

PANDUIT CORP. TINLEY PARK, ILLINOIS

HTAP CLEAR COVER
(CLRCVR1)
CUSTOMER DRAWING

UNLESS OTHERWISE SPECIFIED DIMENSIONAL TOLERANCES ARE:
(.X) ± --- (.XXX) ± ---
(.XX) ± .06 ANGLES ± ---

UNLESS OTHERWISE SPECIFIED, ALL DIMENSIONS ARE GIVEN IN INCHES, THIRD ANGLE PROJECTION

DRAWN BY: JHNU
DATE: 12/04
CHK'D:
MAT'L: SEE NOTES
SCALE: NONE
DRAWING NO / CAD FILE: C41472_02
DWG SIZE: B