Chipsmall Limited consists of a professional team with an average of over 10 year of expertise in the distribution of electronic components. Based in Hongkong, we have already established firm and mutual-benefit business relationships with customers from,Europe,America and south Asia,supplying obsolete and hard-to-find components to meet their specific needs.

With the principle of “Quality Parts,Customers Priority,Honest Operation,and Considerate Service”,our business mainly focus on the distribution of electronic components. Line cards we deal with include Microchip,ALPS,ROHM,Xilinx,Pulse,ON,Everlight and Freescale. Main products comprise IC,Modules,Potentiometer,IC Socket,Relay,Connector.Our parts cover such applications as commercial,industrial, and automotives areas.

We are looking forward to setting up business relationship with you and hope to provide you with the best service and solution. Let us make a better world for our industry!

Contact us

Tel: +86-755-8981 8866 Fax: +86-755-8427 6832
Email & Skype: info@chipsmall.com Web: www.chipsmall.com
Address: A1208, Overseas Decoration Building, #122 Zhenhua RD., Futian, Shenzhen, China

CnC Tech, LLC Industrial Cable and Connector Technology	Engineer drawing	PART NO.	JLL-301 WIRE	SCALE	1: 1
		DESCRIPTION	SJT#18*3C 60C	UNIT:	mm
		DWG No.	CNC-99-18		

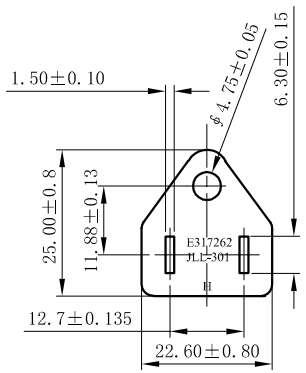

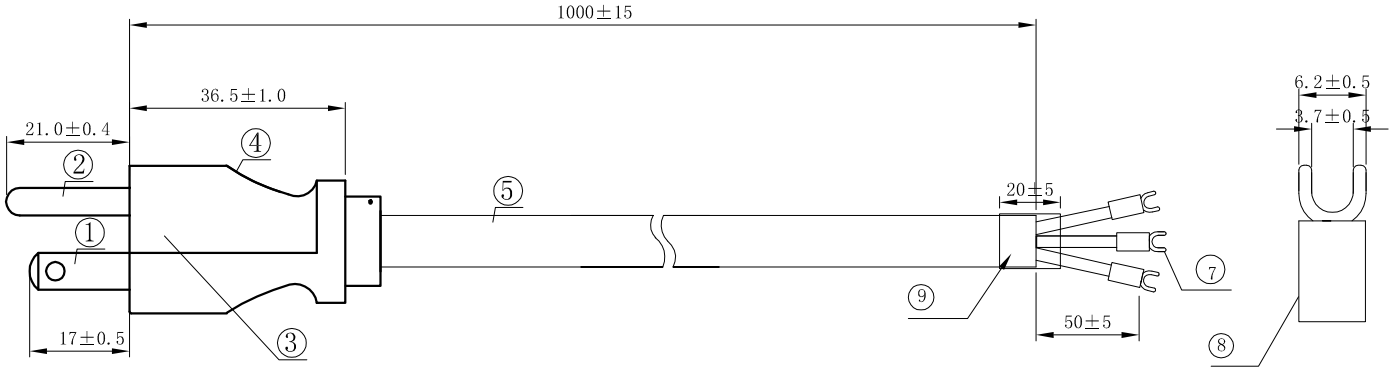

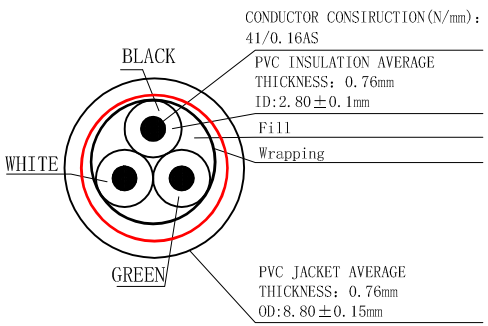

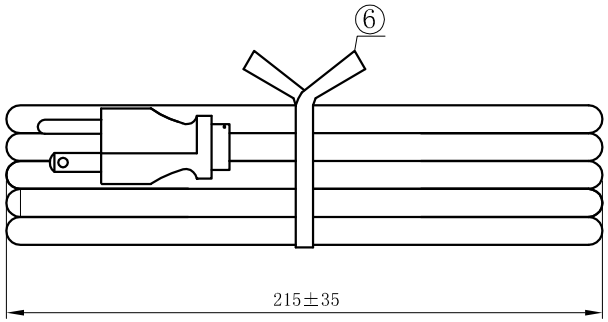

NOTES:

1) JACKET COLOR: BLACK
2). E-GREEN; L-BLACK ; N-WHITE

NO.	SPECIFICATION	COLOUR	MATERIAL	AMOUNT
①	Load terminals 98661	Silver	Cu	2P
②	Grounding terminal 97475	Silver	Cu	1P
③	Model aircraft 8661AN-3P	WHITE	PBT	1PCS
④	Plug JLL-301	BLACK	PVC Cu	1PCS
⑤	Wire SJT 18AWG/3C 60℃	BLACK	PVC Cu	1PCS
⑥	Ties	BLACK		1PCS
⑦	Solutions Terminal		Brass Tin/plated	3PCS
⑧	InsulateColour	RED		
⑨	Adhesive lined heat Shrink tube	BLACK		1PCS

RoHS Compliant

Printing the contents of wire	The use of printing ink replenish Wire

E243711(UL) SJT 3×18AWG(0.824mm²) VW-1 60℃ 300V CSA 228191
SJT 3×18AWG(0.824mm²) FT2 60℃ 300V -LF-

REV	DATE	DESCRIPTION	SYMBOL

DRAWED/DATE	CHECKED/DATE
CAI/12.02.29	GONG/12.02.29