Chipsmall Limited consists of a professional team with an average of over 10 year of expertise in the distribution of electronic components. Based in Hongkong, we have already established firm and mutual-benefit business relationships with customers from,Europe,America and south Asia,supplying obsolete and hard-to-find components to meet their specific needs.

With the principle of “Quality Parts,Customers Priority,Honest Operation,and Considerate Service”,our business mainly focus on the distribution of electronic components. Line cards we deal with include Microchip,ALPS,ROHM,Xilinx,Pulse,ON,Everlight and Freescale. Main products comprise IC,Modules,Potentiometer,IC Socket,Relay,Connector.Our parts cover such applications as commercial,industrial, and automotives areas.

We are looking forward to setting up business relationship with you and hope to provide you with the best service and solution. Let us make a better world for our industry!

Contact us

Tel: +86-755-8981 8866 Fax: +86-755-8427 6832
Email & Skype: info@chipsmall.com Web: www.chipsmall.com
Address: A1208, Overseas Decoration Building, #122 Zhenhua RD., Futian, Shenzhen, China

THIS INFORMATION IS CONFIDENTIAL AND PROPRIETARY TO CW INDUSTRIES INCORPORATED AND ITS AFFILIATES. IT MAY NOT BE DISCLOSED TO ANYONE, OTHER THAN CW INDUSTRIES PERSONNEL, WITHOUT WRITTEN AUTHORIZATION FROM CW INDUSTRIES INCORPORATED, SOUTHAMPTON, PENNSYLVANIA USA.

DIMENSIONS IN INCHES (MILLIMETERS)
DO NOT SCALE DRAWING .....

Dwg. No. CWR-142-XX-0003

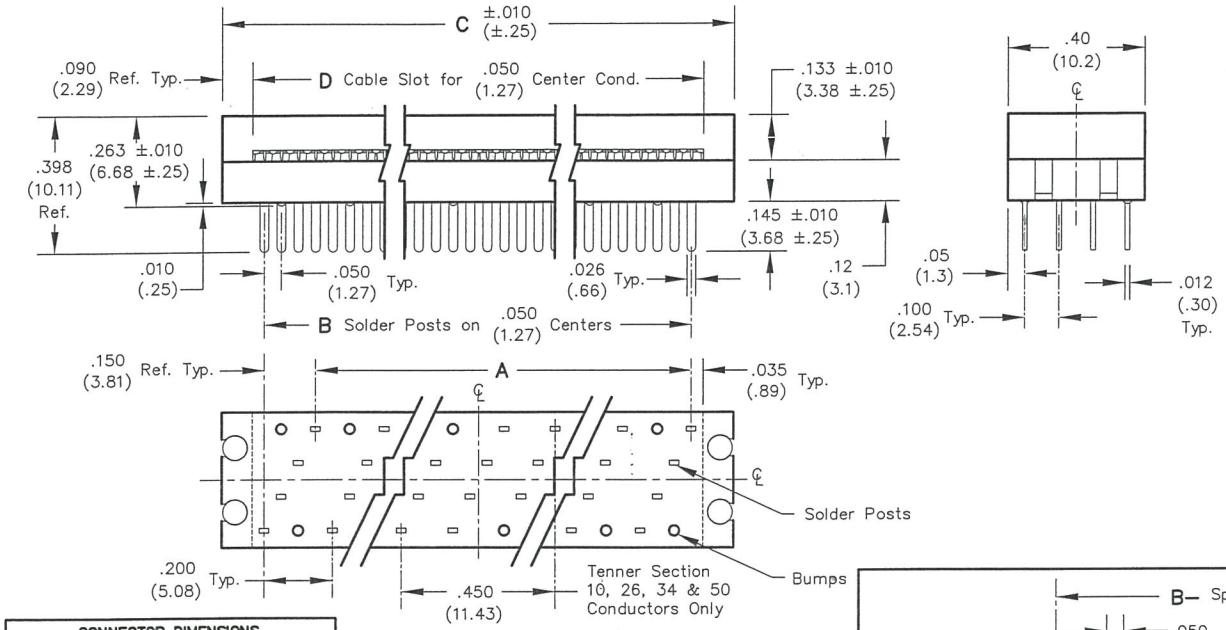

NOTES:

1. Dimensions are in inches; dimensions in ( ) are in millimeters.
2. Metric equivalents are given for general information only, and are based upon 1.00 inches equals (25.4) millimeters.
3. Unless otherwise specified, tolerance are ±.005 (±.13) for three place decimals, and ±.01 (±.3) for two place decimals.

MATERIALS:

PLASTIC PARTS – UL94V-0 Thermoplastic (blue, standard) flame retardant.

CONTACTS – Phosphor bronze, standard;

CONTACT PLATING– .000100 Solder over .000050 Nickel, Std.

OPERATING STANDARDS:

TEMPERATURE RATING – 120°C.
CONTACT RATING – 1 Ampere.
DIELECTRIC STRENGTH – Over 500 V.D.C. AT SEA LEVEL.
CONDUCTORS ACCEPTED – 28–30 AWG solid or stranded.

CONNECTOR DIMENSIONS

No. Conts. –XX	A	B	C	D
10	—	.450 (11.43)	.700 (17.78)	.520 (13.21)
20	.800 (20.32)	.950 (24.13)	1.200 (30.48)	1.020 (25.91)
26	1.100 (27.94)	1.250 (31.75)	1.500 (38.10)	1.320 (33.53)
34	1.500 (38.10)	1.650 (41.91)	1.900 (48.26)	1.720 (43.69)
40	1.800 (45.72)	1.950 (49.53)	2.200 (55.88)	2.020 (51.31)
50	2.300 (58.42)	2.450 (62.23)	2.700 (68.58)	2.520 (64.01)
60	2.800 (71.12)	2.950 (74.93)	3.200 (81.28)	3.020 (76.71)

CUSTOMER DRAWING

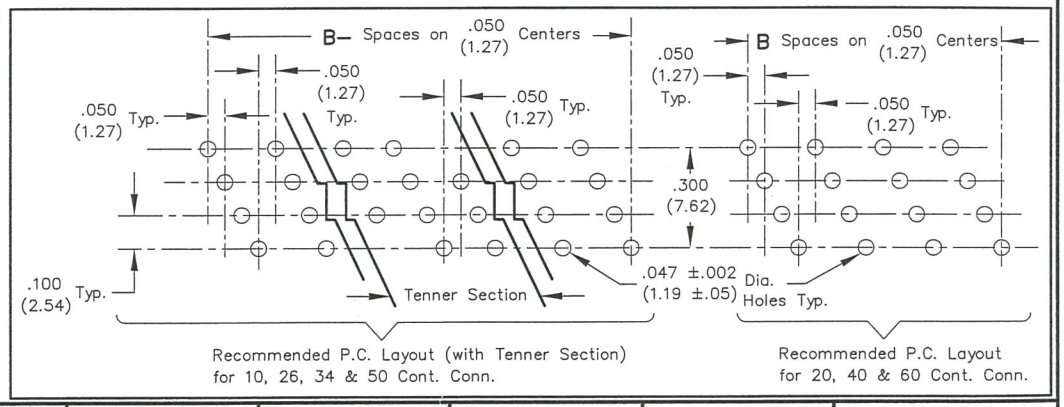

1 2 3 4 5 6 7 8 9 10

B–FORMAT 2002

REVISIONS

0 RELEASED. DGW 7–19–2012

ATTENTION

THIS DRAWING AND ITS ATTACHMENTS, IF ANY, ARE PROPRIETARY TO CW INDUSTRIES AND DESCRIBE DESIGNS THAT ARE CONFIDENTIAL AND MUST NOT BE DISCLOSED UNLESS AUTHORIZED, IN WRITING, BY AN OFFICER OF CW INDUSTRIES.....

PDF MADE

CW INDUSTRIES
Southampton, Pa. 18966

TOLERANCES UNLESS OTHERWISE SPECIFIED

	METRIC
2 Place Decimal ±.010	1 Place Dec. ±.25mm
3 Place Decimal ±.005	2 Place Dec. ±.13mm
Angles ..... ±1°	

Made for: CW IND.
Drawn by: DGW 7–19–2012
Checked by: G. Guld 7-20-12
Approval: G. Guld 7-20-12

Title: P.C.B. CONNECTOR .145" SOLDER POSTS W/O/ S/R/ & COVER LIPS

Division: CONNECTOR

Dwg. No. CWR-142-XX-0003

MASTER