Chipsmall Limited consists of a professional team with an average of over 10 year of expertise in the distribution of electronic components. Based in Hongkong, we have already established firm and mutual-benefit business relationships with customers from,Europe,America and south Asia,supplying obsolete and hard-to-find components to meet their specific needs.

With the principle of “Quality Parts,Customers Priority,Honest Operation,and Considerate Service”,our business mainly focus on the distribution of electronic components. Line cards we deal with include Microchip,ALPS,ROHM,Xilinx,Pulse,ON,Everlight and Freescale. Main products comprise IC,Modules,Potentiometer,IC Socket,Relay,Connector.Our parts cover such applications as commercial,industrial, and automotives areas.

We are looking forward to setting up business relationship with you and hope to provide you with the best service and solution. Let us make a better world for our industry!

Contact us

Tel: +86-755-8981 8866 Fax: +86-755-8427 6832
Email & Skype: info@chipsmall.com Web: www.chipsmall.com
Address: A1208, Overseas Decoration Building, #122 Zhenhua RD., Futian, Shenzhen, China

CXA-46012PJ107

Dimming/Connector Type

■ Features

- ●4 outputs
- ●Usable in a wide range of temperatures
- ●Applicable panel size*: 15 to 17 inches
- ●With brightness control function (Pulse Width Modulation Dimming).
- ●With shut down function.
- ●With a sensing function for running out of lamp (alarm output).
- ●In the high-voltage generator (a terminal and a pattern), an anti-dust measure by silicone application is taken.

(Notice) Applicable panel size becomes a standard.

■ Applications

CXA-46012PJ107 Specifications (Please refer to each specification before use)

Electrical Characteristics

Item	Unit	Symbol	Specification			Condition						
			min	typ	max	Vin(V)	Vrmt(V)	Vbr(V)	Ta(℃)	RL1 to 4(kΩ)	CL1 to 4(pF)(*3)	Remarks
Output Current	mArms	Iout1,2,3,4 (Maximum dimmer)	5.4	6.0	6.6	12±1.2	5	2.5	-30 to +80	100	5	(*1)
		Iout1,2,3,4 (Minimum dimmer)	2.4	3.0	3.6	12±1.2	5	0	-30 to +80	100	5	(*1)
Input Current	A	Iin	-	1.35	1.8	12	5	2.5	-30 to +80	100	5	
Oscillatory Frequency	kHz	Freq1	38	45	52	12±1.2	5	2.5	-30 to +80	100	5	
	Hz	Freq2 (Duty frequency)	170	220	270	12±1.2	5	2.5	-30 to +80	100	5	
Open Circuit Voltage	Vrms	Vopen	1700	-	-	12±1.2	5	2.5	-30 to +80	∞	5	Open load
Alarm Signal	V	Vst	-	-	1.0	12±1.2	5	2.5	23±5	100	5	On a normal operation (*2)
			2.7	3.0	3.3	12±1.2	5	2.5	23±5	∞	5	In case of lamp anomaly (*2)

(*1) Please refer to the connection diagram for details of a dimming method.
(*2) Please refer to the connection diagram for details of alarm output.
(*3) As equivalent circuit of panel load, connect resistance load (RL) and distributed capacity (CL), and have provided by an electrical characteristic.

Other Specifications

Dimming Function		Yes
Operating Temperature	℃	-30 to +80
Storage Temperature	℃	-40 to +85
Operating Humidity Ratio	RH%	95max.
Safety Standard		—
Weight	g	42typ.
Dimensions (WxDxH)	mm	180x37x8.5 (*4)
Fused Input		Yes
Remote ON / OFF		Yes
Alarm Signal Function		Yes
Shutdown Function		Yes
Silicone Coating on High Voltage Area		Yes

(*4) These dimensions are indicated the maximum only H. Others are typical values.

■ Conformity to RoHs Directive

This means that, in conformity with EU Directive 2002/95/EC, lead, cadmium, mercury, hexavalent chromium, and specific bromine-based flame retardants, PBB and PBDE, have not been used, except for exempted applications.

Outline Drawing

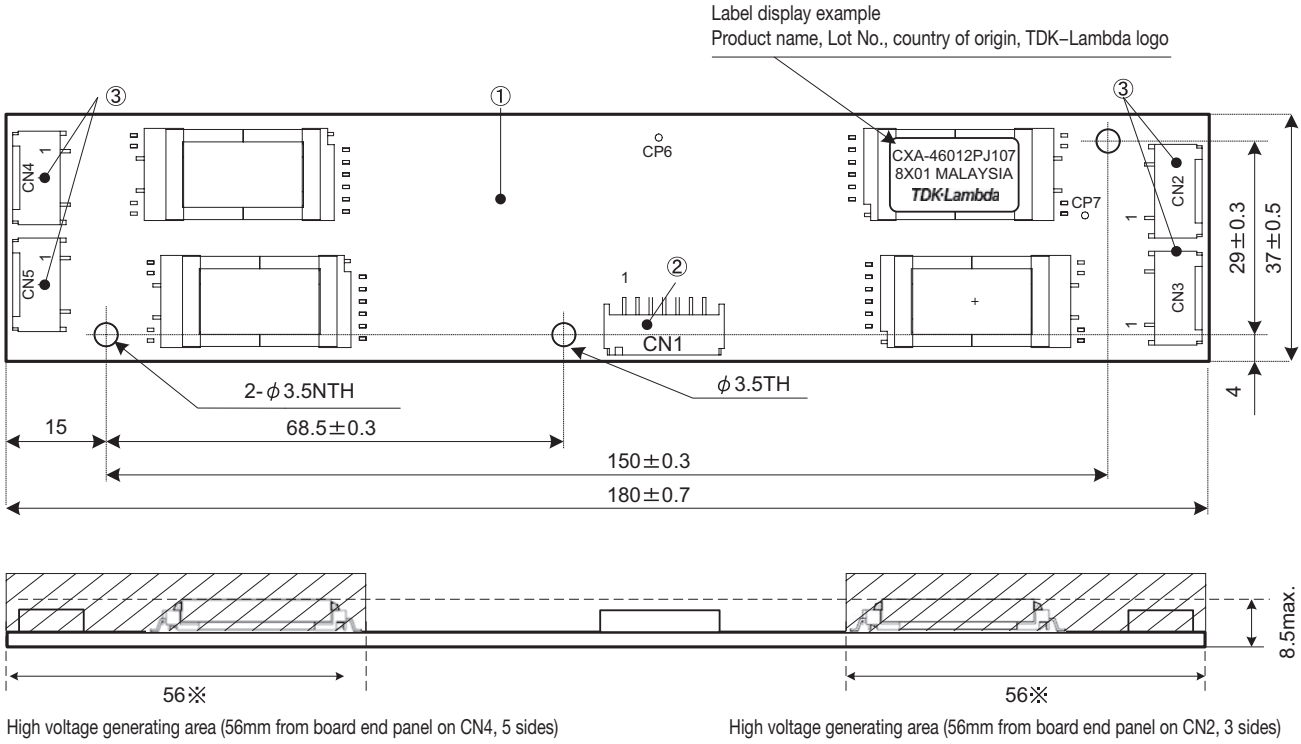

*From high-voltage generator, please secure space distance more than 3mm in top and bottom right and left.

Unit: mm

Connector

No.	Component name	Type name	Qty	Remarks	Recommended suitable connector
①	Printed circuit board PCB	CEM-3	1	UL94V-0 t=1.0	-
②	Input connector CN1	S7B-PH-SM4-TB(LF)(SN)	1	J.S.T Mfg., Co., Ltd	PHR-7
③	Output connector CN2,CN3,CN4,CN5	SM02(8.0)-BHS-1-TB(LF)(SN)	4	J.S.T Mfg., Co., Ltd	BHR-03VS-1

Terminal Number & Function

Input side CN1

Terminal No.	Symbol	Rating	Remarks
CN1-1	Vin	12±1.2	Power source input
CN1-2			
CN1-3	GND	0V	Ground
CN1-4			
CN1-5	Vrmt	0V/2.0V to Vin	Remote terminal 0 to 0.8V : OFF 2.0 to Vin : ON
CN1-6	Vbr	0 to 2.5V	Dimmer terminal 2.5V: Maximum brightness
CN1-7	Vst(output)	0V/3V	Alarm output Lump open: 3V

Output side CN2

Terminal No.	Symbol	Remarks
CN2-1	$V_{HIGH}1$	Output 1
CN2-2	N.C.	-
CN2-3	$V_{LOW}1$	Output 1 return

Output side CN3

Terminal No.	Symbol	Remarks
CN3-1	$V_{HIGH}2$	Output 2
CN3-2	N.C.	-
CN3-3	$V_{LOW}2$	Output 2 return

Output side CN4

Terminal No.	Symbol	Remarks
CN4-1	$V_{HIGH}3$	Output 3
CN4-2	N.C.	-
CN4-3	$V_{LOW}3$	Output 3 return

Output side CN5

Terminal No.	Symbol	Remarks
CN5-1	$V_{HIGH}4$	Output 4
CN5-2	N.C.	-
CN5-3	$V_{LOW}4$	Output 4 return

Connections

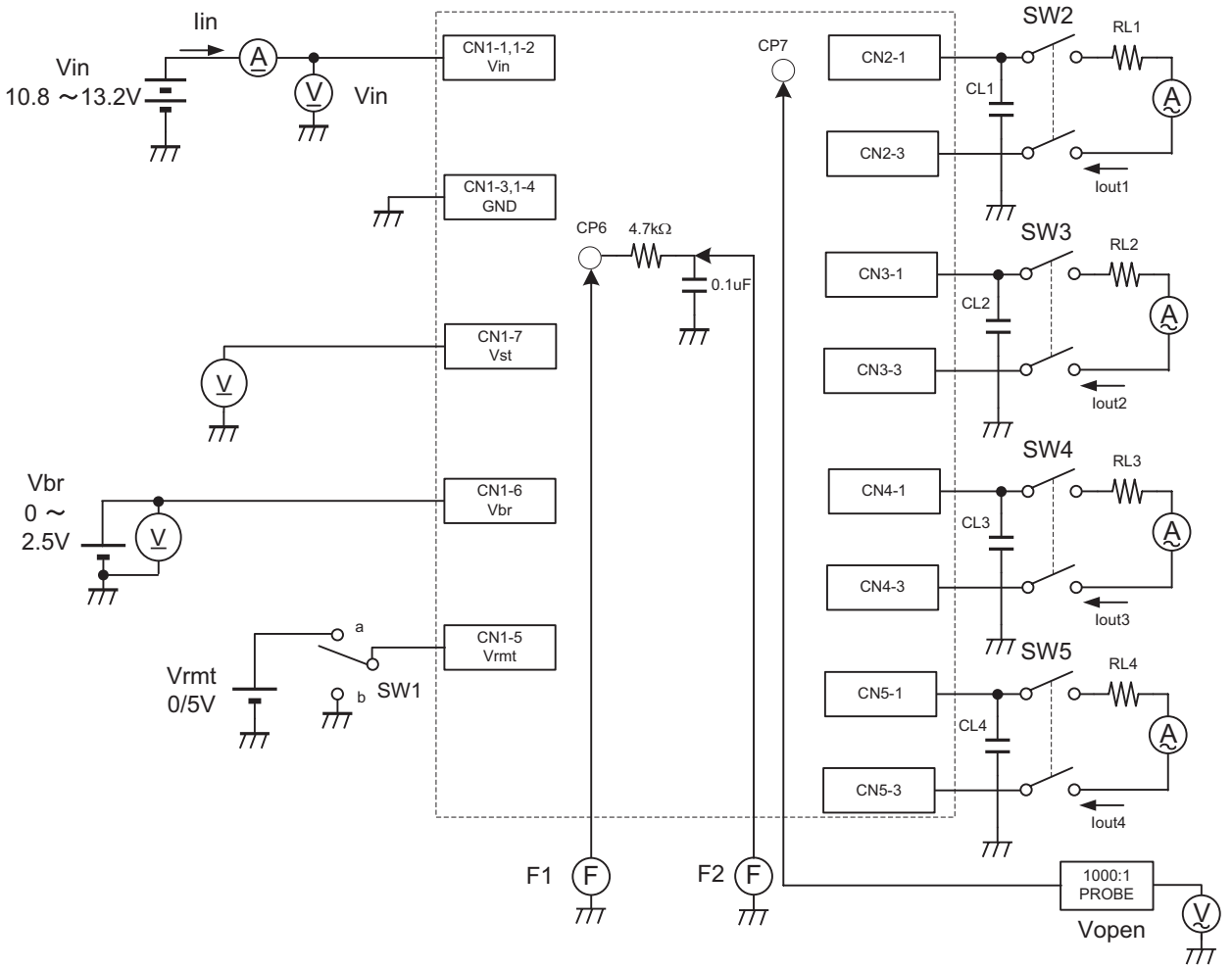

RL1, 2, 3, 4: Load resistance 100kΩ (20W min.)
CL1, 2, 3, 4: Distribution capacity condenser 6KV 5pF

Operate as follows by switching a SW1.

SW1	Unit operates
a	Operates
b	Does not operate
Open	Does not operate

Operates as follows depending on SW2-4 changes.

SW2	SW3	SW4	SW5	Unit operates	Outputs alarm
Short	Short	Short	Short	Operates	LOW(0V)
			Open	Shuts down	HIGH(3V)
		Open	Short	Shuts down	HIGH(3V)
			Open	Shuts down	HIGH(3V)
	Open	Short	Short	Shuts down	HIGH(3V)
			Open	Shuts down	HIGH(3V)
		Open	Short	Shuts down	HIGH(3V)
			Open	Shuts down	HIGH(3V)
Open	Short	Short	Short	Shuts down	HIGH(3V)
			Open	Shuts down	HIGH(3V)
		Open	Short	Shuts down	HIGH(3V)
			Open	Shuts down	HIGH(3V)
	Open	Short	Short	Shuts down	HIGH(3V)
			Open	Shuts down	HIGH(3V)
		Open	Short	Shuts down	HIGH(3V)
			Open	Shuts down	HIGH(3V)