Chipsmall Limited consists of a professional team with an average of over 10 year of expertise in the distribution of electronic components. Based in Hongkong, we have already established firm and mutual-benefit business relationships with customers from,Europe,America and south Asia,supplying obsolete and hard-to-find components to meet their specific needs.

With the principle of “Quality Parts,Customers Priority,Honest Operation,and Considerate Service”,our business mainly focus on the distribution of electronic components. Line cards we deal with include Microchip,ALPS,ROHM,Xilinx,Pulse,ON,Everlight and Freescale. Main products comprise IC,Modules,Potentiometer,IC Socket,Relay,Connector.Our parts cover such applications as commercial,industrial, and automotives areas.

We are looking forward to setting up business relationship with you and hope to provide you with the best service and solution. Let us make a better world for our industry!

Contact us

Tel: +86-755-8981 8866 Fax: +86-755-8427 6832
Email & Skype: info@chipsmall.com Web: www.chipsmall.com
Address: A1208, Overseas Decoration Building, #122 Zhenhua RD., Futian, Shenzhen, China

版数 REV.	年月日 DATE	DCN NO.	変更内容 DESCRIPTION	製図 DR.	担当 CHK.	査閲 APPD.	承認 APPD.
2	14.Mar.2008	065261	ADDED DIMENSION AND CHANGED FORM	———	Y.KUROKI	———	Y.SUGII
3	9.Oct.2009	068748	ADDITION OF PLATING THICKNESS	———	K.KOTAKA	T. Wada	T. Masumoto

図面番号(DRAWING NO.) SJ108063

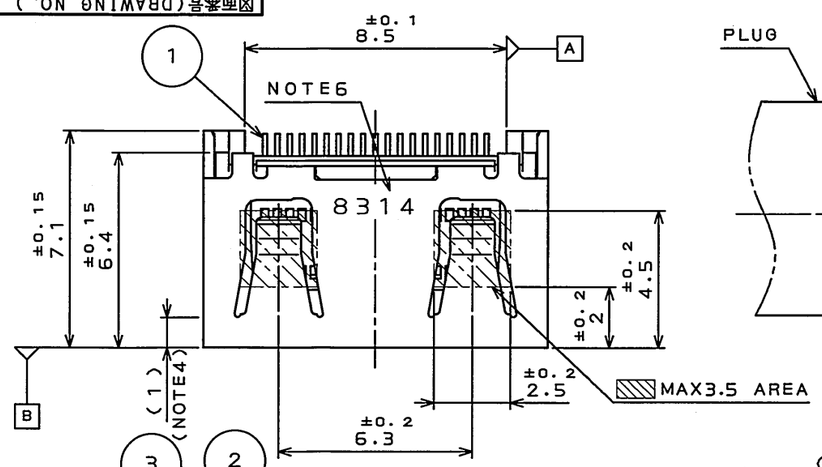

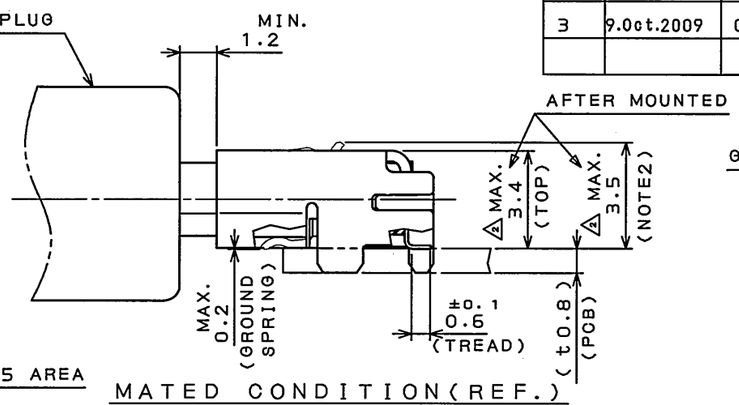

MATED CONDITION(REF.)
嵌合状態図(参考)

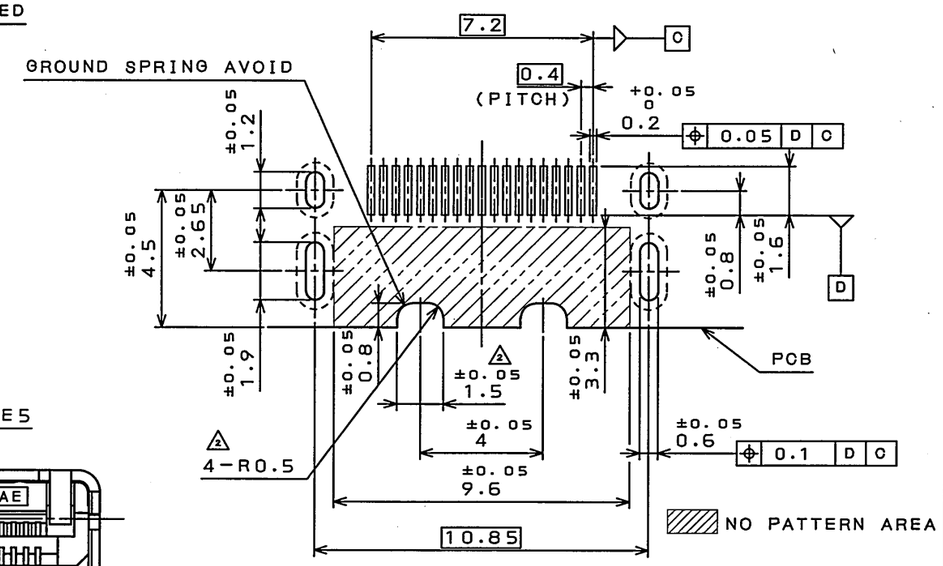

APPLICABLE P.C.B. DIMENSION(REF.)
適合基板寸法(参考)

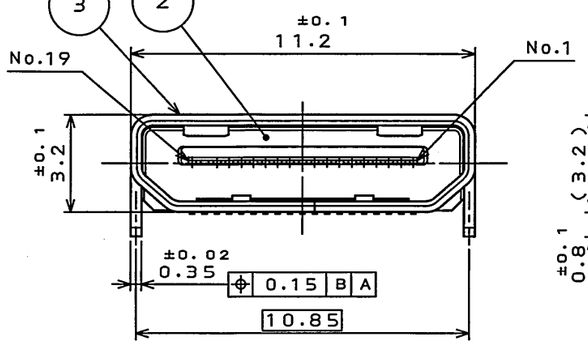

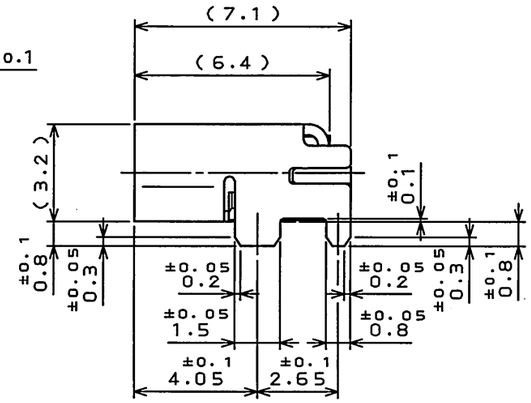

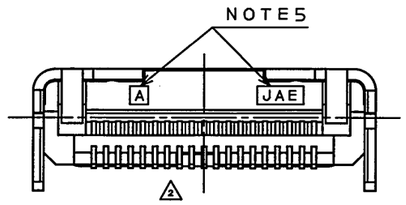

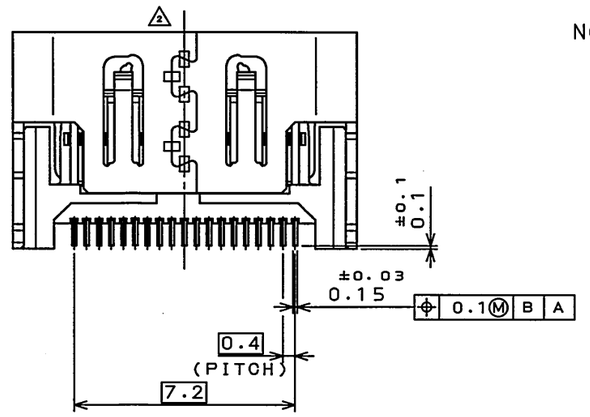

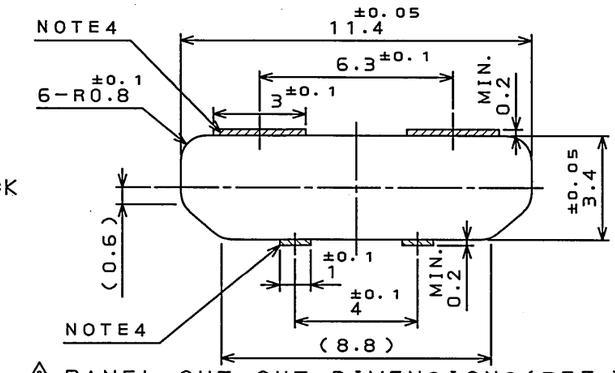

PANEL CUT OUT DIMENSIONS(REF.)
推奨取付板開口寸法(参考)

NOTE1.COPLANARITY OF SMT TERMINAL IS 0.1 MAX.
2. THIS DIMENSION IS SET AT MAXIMUM RATE OF THE SPRING LOCK STICKING OUT WHEN MATING WITH PLUG.
3. MATING DIMENSION IS BASED ON THE HDMI SPEC.
4. WHEN THE PANEL ENTERS MORE 1mm THAN CONNECTOR, THE PANEL IS CUT AS SHOWN IN RIGHT FIGURE.

注1.SMT端子のコプラナリティは0.1以下とする。
2.本寸法は嵌合中のパネ最大突出寸法である。
3.嵌合寸法についてはHDMI規格に基づく。
4.取付板がコネクタ開口面より1mm以上入り込む場合は、右図の通り切欠きを設ける。

NOTE5.COMPANY LOGO AND CAVITY. NUMBER ARE MARKED AS INDICATED.
6.PRODUCTION LOT NUMBER IS MARKED ON THE TOP OF SHELL.

5.図示の位置に社票及びキャビNo.を表示する。
6.図示の位置にロットNo.を表示する
(EX.) 8 3 1 4
- 生産日 DAY(01~31)
- 生産月 MONTH(1~9, Oct:O, Nov:X, Dec:Y)
- 生産年(西暦下1桁) YEAR(A. D. LAST ONE FIGURE)

符号 NO.	名称 DESCRIPTION	個数 QTY.	材料 MATERIAL	仕上 FINISH	備考 REMARKS
3	SHELL	1	COPPER ALLOY	TIN PLATING OVER NICKEL	———
2	INSULATOR	1	LCP	COLOR:BLACK	UL94V-0
1	CONTACT	19	COPPER ALLOY	GOLD PLATING OVER NICKEL	CONTACT AREA:Au0.3μm MIN. 接触部:Au0.3μm 以上

仕様書(SPECIFICATION) JACS-30101
第1版(ORIGINAL DATE) 12.Oct.2007
製図 DR.
担当 CHK. Y.KUROKI
査閲 APPD. ———
承認 APPD. G.HAGA
一般公差(GENERAL TOLERANCE)
寸法(DIMENSION) . ± .X ± .XX ± .XXX ±
角度(ANGLES) X° ± X°X' ±
尺度(SCALE) 5:1
シリーズ(SERIES) DC2
名称(TITLE) DC2R019JA3 (HDMI TYPE C)
質量(MASS)
日本航空電子工業株式会社 JAPAN AVIATION ELECTRONICS INDUSTRY, LTD.
図面番号(DRAWING NO.) SJ108063
版数(REV.) 3
SIZE A3

JAE-CONNECTOR.COM
Reference Only

JAE CONNECTOR DIV. PROPRIETARY.
COPYRIGHT (C) 2007, JAPAN AVIATION ELECTRONICS INDUSTRY, LTD.

DOF-0-212F(05.08)