Chipsmall Limited consists of a professional team with an average of over 10 year of expertise in the distribution of electronic components. Based in Hongkong, we have already established firm and mutual-benefit business relationships with customers from,Europe,America and south Asia,supplying obsolete and hard-to-find components to meet their specific needs.

With the principle of “Quality Parts,Customers Priority,Honest Operation,and Considerate Service”,our business mainly focus on the distribution of electronic components. Line cards we deal with include Microchip,ALPS,ROHM,Xilinx,Pulse,ON,Everlight and Freescale. Main products comprise IC,Modules,Potentiometer,IC Socket,Relay,Connector.Our parts cover such applications as commercial,industrial, and automotives areas.

We are looking forward to setting up business relationship with you and hope to provide you with the best service and solution. Let us make a better world for our industry!

Contact us

Tel: +86-755-8981 8866 Fax: +86-755-8427 6832
Email & Skype: info@chipsmall.com Web: www.chipsmall.com
Address: A1208, Overseas Decoration Building, #122 Zhenhua RD., Futian, Shenzhen, China

Apr.1.2017 Copyright 2017 HIROSE ELECTRIC CO., LTD. All Rights Reserved.

	COUNT	DESCRIPTION OF REVISIONS	BY	CHKD	DATE		COUNT	DESCRIPTION OF REVISIONS	BY	CHKD	DATE
△					. .	△					. .
△					. .	△					. .
△					. .	△					. .

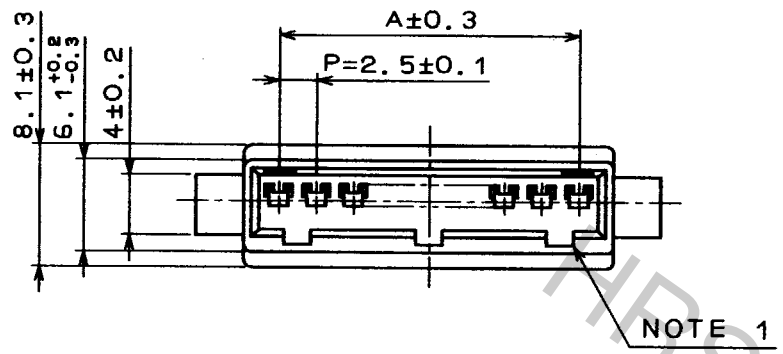

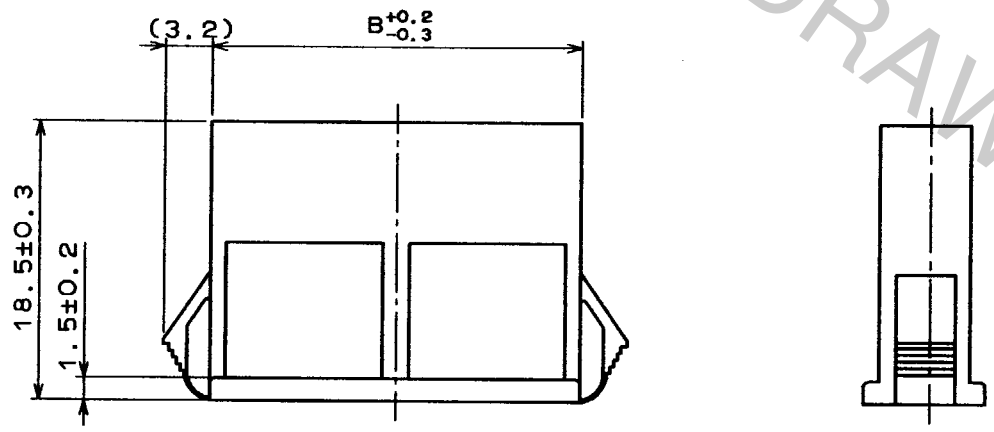

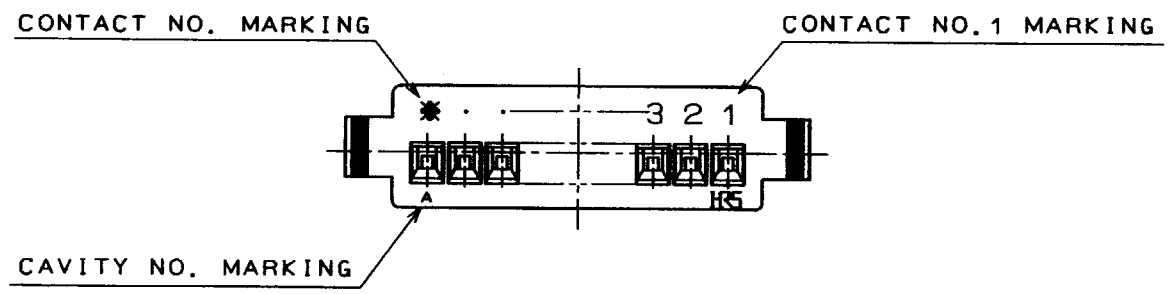

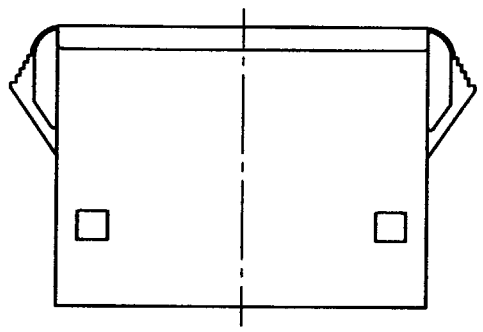

〈PANEL CUT-OUT〉

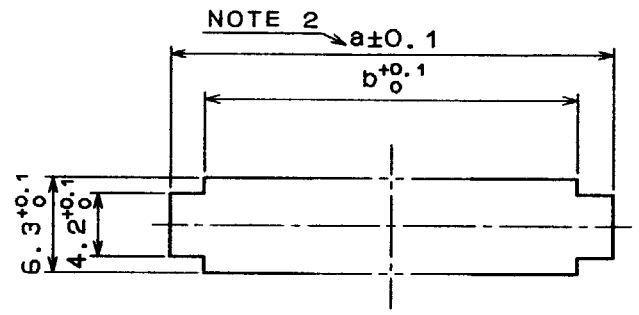

CL No.	PART No.	A	B	PANEL CUT-OUT PANEL THICKNESS 0.5~1.2 a	1.3~1.6 a	1.7~2.0 a	b
CL541-0700-9	DF1BA- 2EP-2.5RC	2.5	7.1	11.2	11.9	12.6	7.3
CL541-0701-1	DF1BA- 3EP-2.5RC	5.0	9.6	13.7	14.4	15.1	9.8
CL541-0702-4	DF1BA- 4EP-2.5RC	7.5	12.1	16.2	16.9	17.6	12.3
CL541-0703-7	DF1BA- 5EP-2.5RC	10.0	14.6	18.7	19.4	20.1	14.8
CL541-0704-0	DF1BA- 6EP-2.5RC	12.5	17.1	21.2	21.9	22.6	17.3
CL541-0705-2	DF1BA- 7EP-2.5RC	15.0	19.6	23.7	24.4	25.1	19.8
CL541-0706-5	DF1BA- 8EP-2.5RC	17.5	22.1	26.2	26.9	27.6	22.3
CL541-0707-8	DF1BA- 9EP-2.5RC	20.0	24.6	28.7	29.4	30.1	24.8
CL541-0708-0	DF1BA-10EP-2.5RC	22.5	27.1	31.2	31.9	32.6	27.3
CL541-0709-3	DF1BA-11EP-2.5RC	25.0	29.6	33.7	34.4	35.1	29.8
CL541-0710-2	DF1BA-12EP-2.5RC	27.5	32.1	36.2	36.9	37.6	32.3
CL541-0711-5	DF1BA-13EP-2.5RC	30.0	34.6	38.7	39.4	40.1	34.8
CL541-0713-0	DF1BA-15EP-2.5RC	35.0	39.6	43.7	44.4	45.1	39.8

NOTES 1: CONCAVE PORTION TO PREVENT CONNECTOR MISINSERTION SHALL BE APPLIED ONE AT THE CENTER FOR 2 CONTACTS, TWO AT BOTH ENDS FOR 3 TO 6 CONTACTS AND 3 FOR ANOTHER NUMBER OF CONTACT AS THE FIGURE SHOWN.

2: WHEN YOU MOUNT DF1BA RELAY SOCKET ON A PANEL, PLEASE TAKE NOTE OF DIMENSIONS 'a', INDICATED IN THE TABLE ABOVE. BICAUSE THE CUT-OUT DIMENSION DEPENDS ON PANEL THICKNESS.
THE PANEL CUT-OUT SHALL BE FREE FROM BURR.

NO.	MATERIAL	FINISH, REMARKS	NO.	MATERIAL	FINISH, REMARKS
			1	POLYAMIDE	NATURAL(WHITE) UL94V-0

CODE NO. (OLD)	DRAWN	DESIGNED	CHECKED	APPROVED	RELEASED
	R. SASAKI 951011	M. Tanaka 95.10.23	J. Oma '95.10.23	H. Yamamoto '95.10.23	

SCALE	DRAWING NO.	PART NO.
2 : 1	EDC3-160595	DF1BA-※EP-2.5RC
UNITS mm	HRS HIROSE ELECTRIC CO., LTD.	CODE NO. CODE NO. SHALL BE IN ACCORDANCE WITH TABLE. 1/1

TO

FORM No. 229

HRS DRAWING DATABASE