Chipsmall Limited consists of a professional team with an average of over 10 year of expertise in the distribution of electronic components. Based in Hongkong, we have already established firm and mutual-benefit business relationships with customers from,Europe,America and south Asia,supplying obsolete and hard-to-find components to meet their specific needs.

With the principle of “Quality Parts,Customers Priority,Honest Operation,and Considerate Service”,our business mainly focus on the distribution of electronic components. Line cards we deal with include Microchip,ALPS,ROHM,Xilinx,Pulse,ON,Everlight and Freescale. Main products comprise IC,Modules,Potentiometer,IC Socket,Relay,Connector.Our parts cover such applications as commercial,industrial, and automotives areas.

We are looking forward to setting up business relationship with you and hope to provide you with the best service and solution. Let us make a better world for our industry!

Contact us

Tel: +86-755-8981 8866 Fax: +86-755-8427 6832
Email & Skype: info@chipsmall.com Web: www.chipsmall.com
Address: A1208, Overseas Decoration Building, #122 Zhenhua RD., Futian, Shenzhen, China

THE INFORMATION CONTAIN HEREIN IS PROPRIETARY TO HIROSE ELECTRIC (USA), INC., ALL RIGHTS THEREIN ARE RESERVED AND SHALL NOT BE USED, DUPLICATED, OR FURTHER DISSEMINATED FOR ANY PURPOSE WITHOUT THE CONSENT OF HIROSE ELECTRIC (USA), INC.

REVISIONS

ZONE	REV.	DESCRIPTION	DATE	APPROVED
	N/R	NEW RELEASE	2/10/03	KmG
	A	REVISED PER DCN# 0872	5.19.03	A.S.

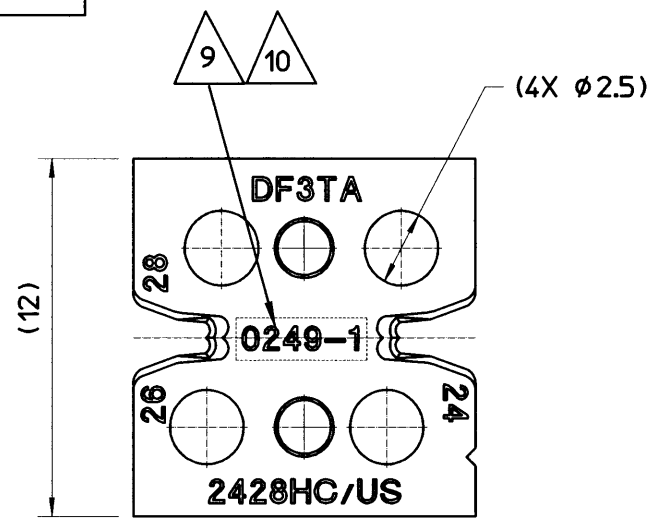

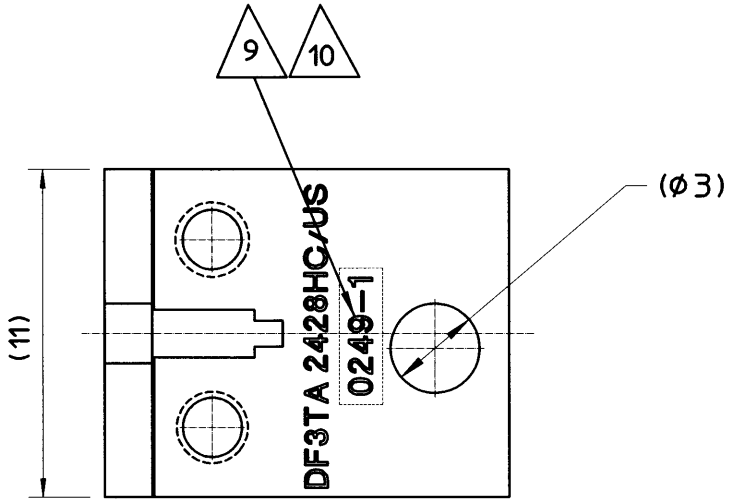

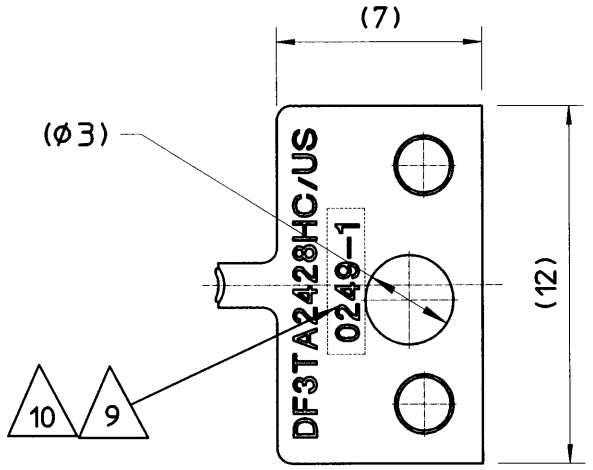

DIE - CRIMPER ASSY 6

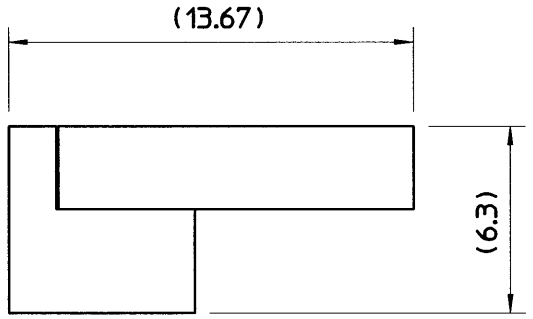

DIE - CONTACT HOLDER ASSY 6

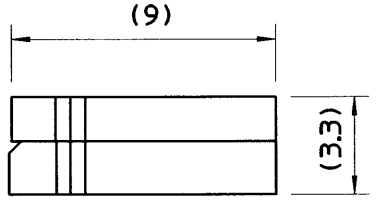

DIE - ANVIL ASSY 6

DATE CODE EXPLANATION: 9 10

0249- 1

YEAR — WEEK — SET No.

11. PACKAGING: CARDBOARD BOX, SIZE 203mm X 76mm X 51mm (8" X 3" X 2").
10. ALL THREE (3) DIES ARE SOLD AS MATCHING ASSEMBLY ONLY; AND TO BE MARKED WITH THE SAME DATE CODE.
9. DATE CODE AND SET No.; SEE EXAMPLE FOR EXPLANATION.
8. PART/No. DF3-TA2428HC/US-DS TO BE PURCHASED AS A SET ONLY.
7. RECOMMENDED NUMBER OF CRIMPING CYCLES - 15,000.
6. FOR ASSEMBLY, INSTALLATION AND OPERATION OF THIS DIE SET REFER TO INSTRUCTION MANUAL P/No. PS076.
5. THIS DIE SET RECOMMENDED TO BE USED ONLY WITH APPLICABLE HAND CRIMP TOOL, P/No. HRUS-HT-1, TO CRIMP SOCKET TERMINAL, P/No. DF3-2428SC/SCC.
4. APPLICABLE WIRE STYLE: UL 1007, AWG 24, 26 AND 28.
3. MATERIAL AND FINISHES:
   DIES, ANVILS, CONTACT STOPPER AND SPACER BLOCK- TOOL STEEL.
2. DIMENSIONS IN ( ) ARE FOR REFERENCE ONLY
1. DIMENSIONING AND TOLERANCING PER ANSI/ASME Y14.5M-1994

NOTES (UNLESS OTHERWISE SPECIFIED)

CUSTOMER USE DRAWING

FSCM NO. 0AG18

THIRD ANGLE PROJECTION

UNLESS OTHERWISE SPECIFIED DIMENSION ARE IN MILLIMETERS
TOLERANCES ARE:
.X = ±0.1
.XX = ±0.05
.XXX = ±0.03
ANGLE= ±1°

HIROSE ELECTRIC (U.S.A), INC
SIMI VALLEY, CALIFORNIA 93065

PART NUMBER: DF3-TA2428HC/US-DS

CL NUMBER: 5920-8500-0

PROJECT NO.		APPROVALS	DATE
		Drawn: Luis Lostaunau	02/06/03
XXXXXXXX	XXXXXX	Checked: Alla Shchur	02/07/03
NEXT ASSY.	USED ON	Issued: Mac Nagashima	02/07/03
APPLICATION		Issued: Kris McGuire	02/10/03

SIZE	DWG NUMBER	REV.
B	DF3-TA2428HC/US-DS	A

SCALE N/A SHEET 1 OF 1

DWG NO. DF3-TA2428HC-US-DS SHT. 1 REV. A

DATABASE: DF3-TA2428HC-US-DS